Hydrogen Effects in Materials

Brian Somerday
Sandia National Laboratories
Livermore, CA, USA

3rd European Summer School on Hydrogen Safety
University of Ulster, Belfast, UK
July 28, 2008

Outline

- Introduction
  - H_2 interactions with metal components
  - Safety concern: hydrogen embrittlement (HE)
- Methods to assess material performance
- Variables affecting HE
  - Material
  - Environmental
  - Mechanical

Sandia National Laboratories

Outline

- Considerations for materials selection
- Component design
  - Design approach
  - Material property measurement
  - Example design analysis
- Recommendations

Sandia National Laboratories

H_2 containment components

On-board fuel tanks

Manifold components

Sandia National Laboratories

H_2 containment components

Transport and stationary tanks

Pipelines

Sandia National Laboratories

H_2 interactions with metal components

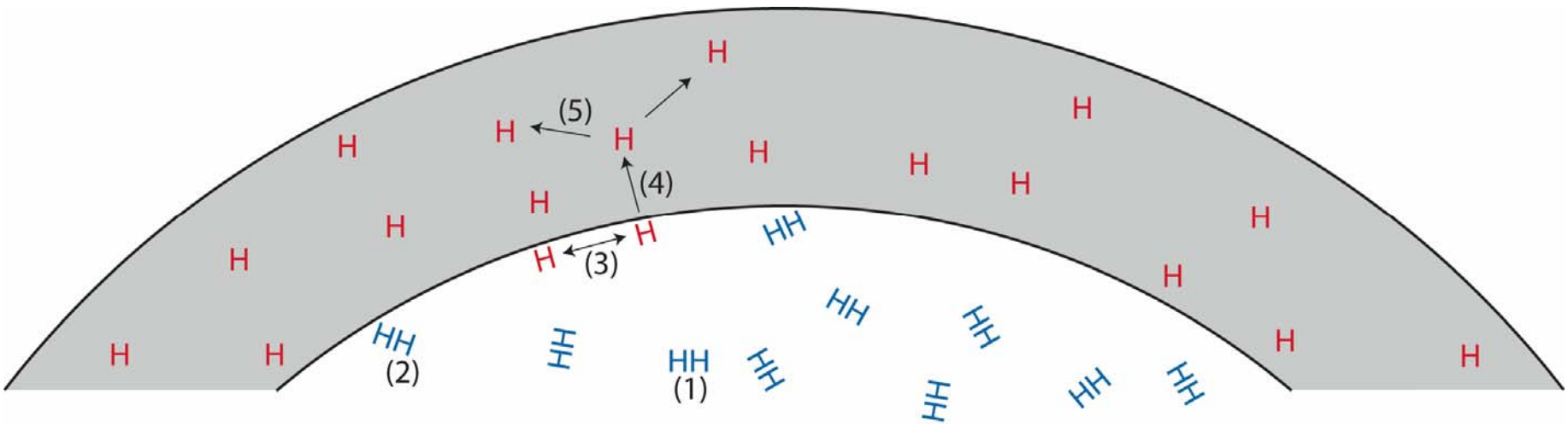

1) H_2 gas
2) H_2 adsorption
3) H_2 dissociation to H
4) H absorption
5) H diffusion

Sandia National Laboratories

Two principal safety concerns

- H_2 permeation through wall of structure
  - Effectively results in H_2 leak
- Hydrogen embrittlement (HE) of structural metal
  - Crack propagation through wall of structure
  - HE mechanisms involve H in solution
    - Temperatures < 200 ^{o}C
    - Other H-related degradation mechanisms operate >200 ^{o}C

Sandia National Laboratories

HE enables crack propagation

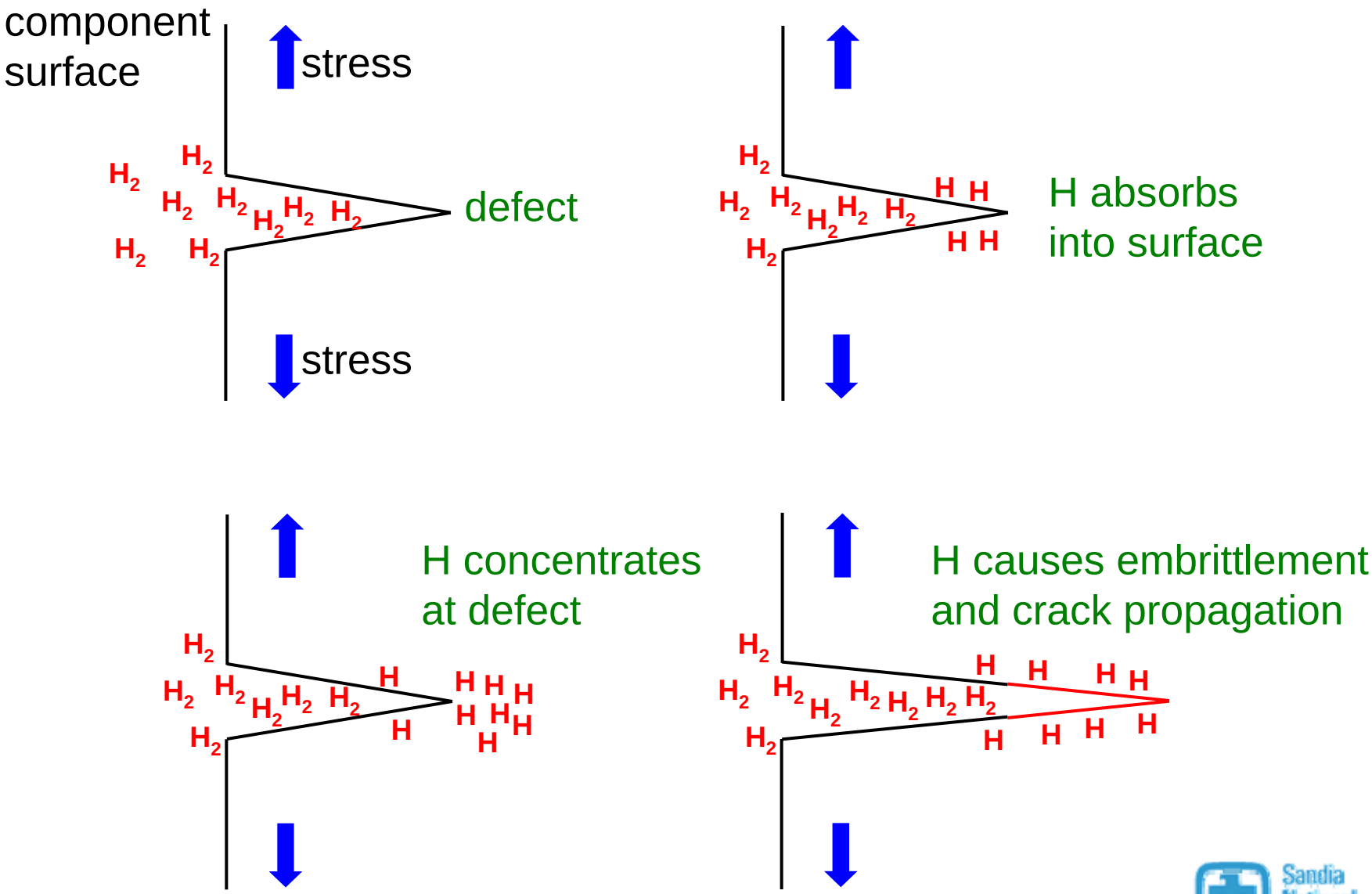

Hydrogen embrittlement mechanisms

Hydrides

D. Westlake,
H. Birnbaum

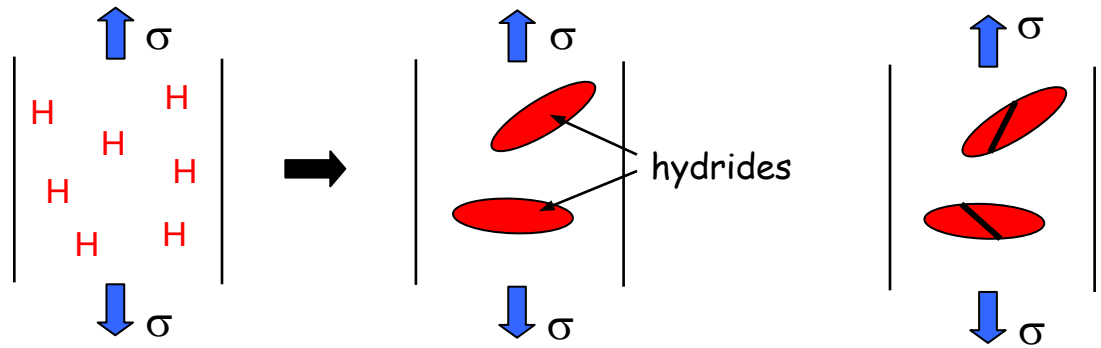

Hydrogen-Enhanced Localized Plasticity (H.E.L.P.)

C. Beachem, H. Birnbaum,
I. Robertson, P. Sofronis

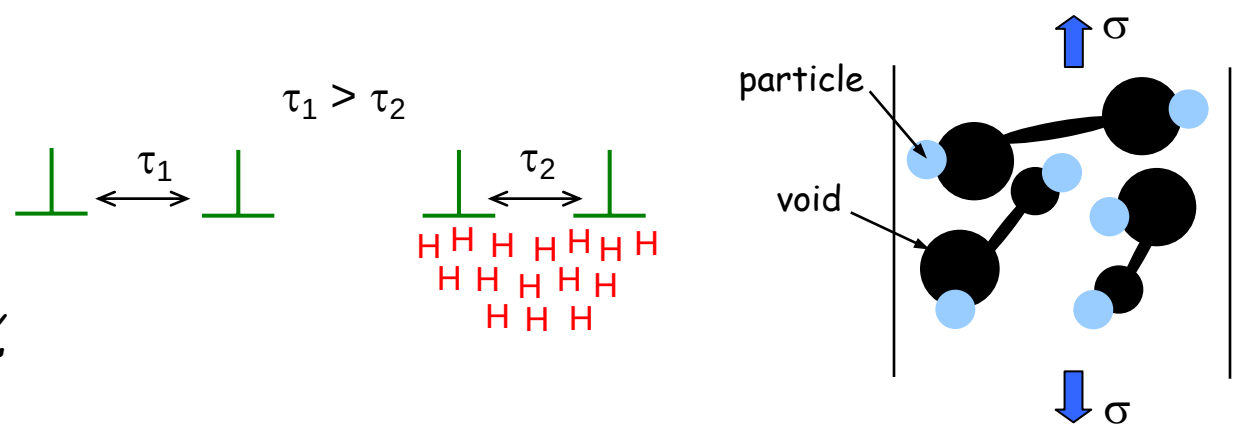

Hydrogen-Enhanced Decohesion

A. Troiano, R. Oriani

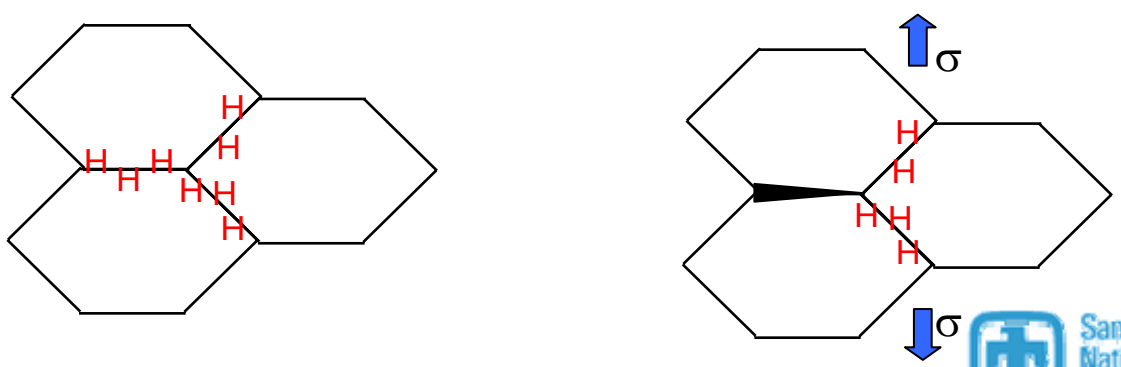

HE due to hydrogen-enhanced decohesion

Barthélémy, 1st ESSHS, 2006

"Intergranular" HE can be devastating

Sandia National Laboratories

Material performance: test methods

strength of materials:

σ_u, σ_y, ε_f, RA

S-N

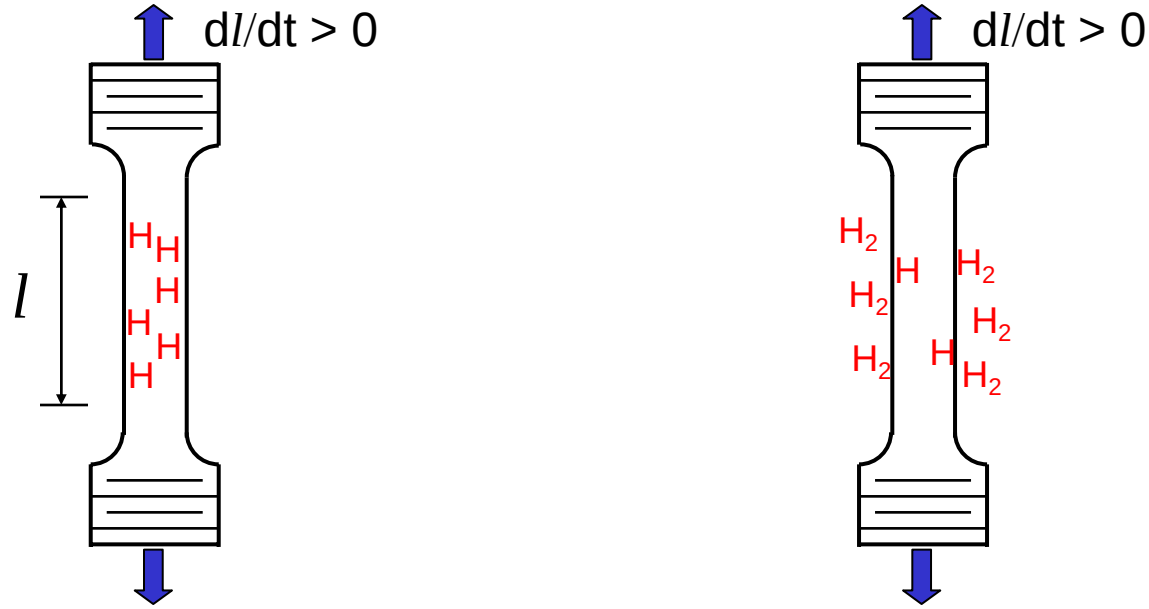

fracture mechanics:

K_{IH}, K_{TH}

da/dN *vs* ΔK

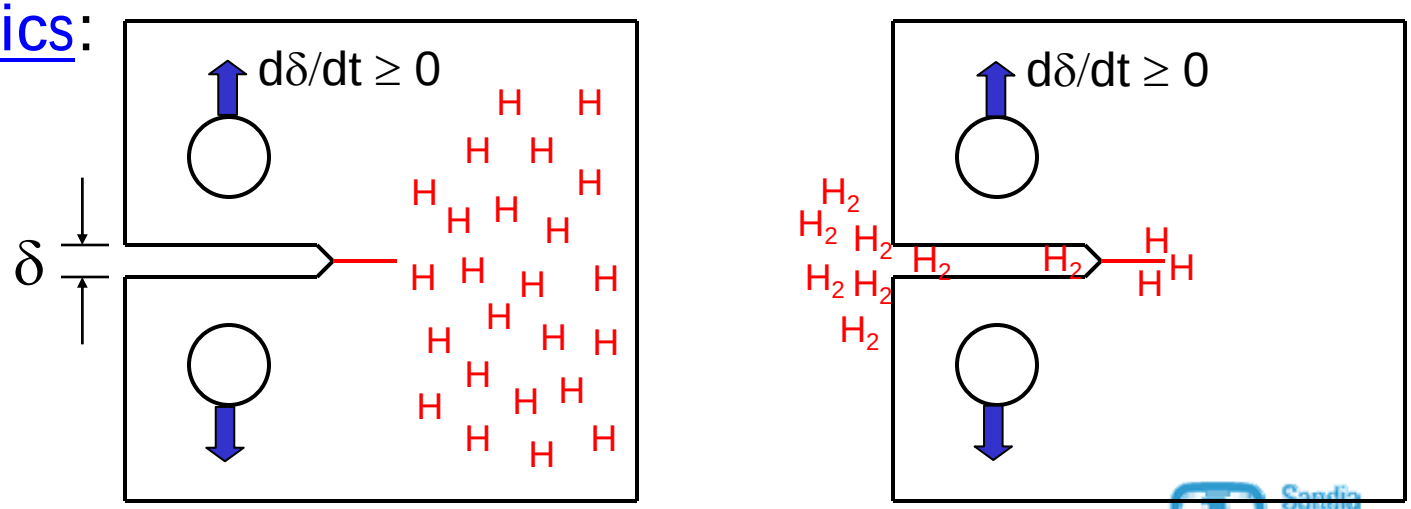

Material performance: test methods

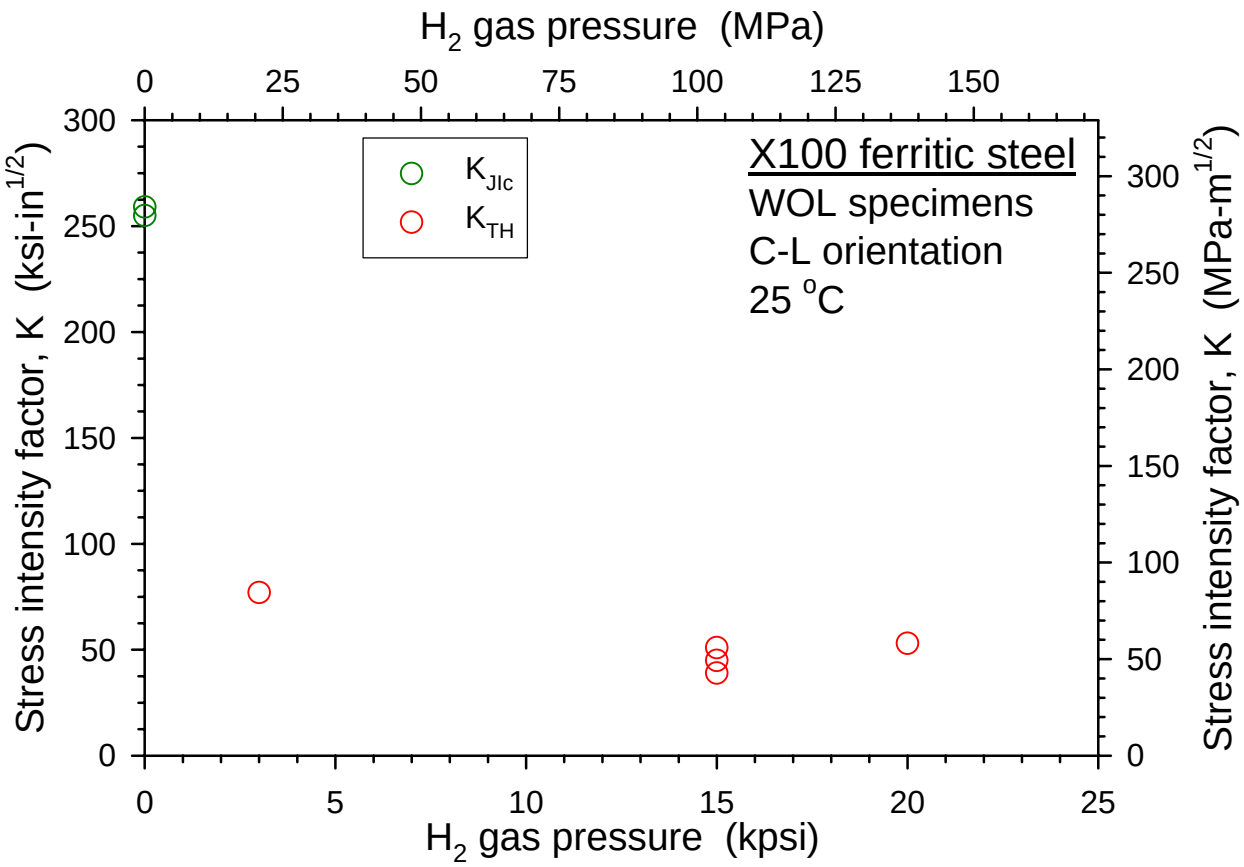

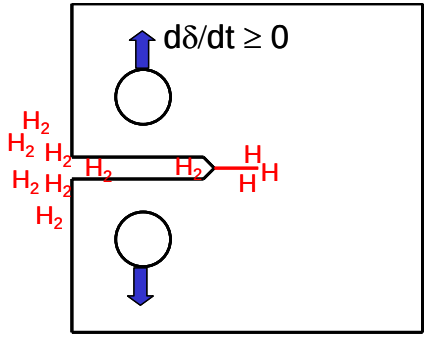

HE manifested by reduced fracture toughness

Material performance: test methods

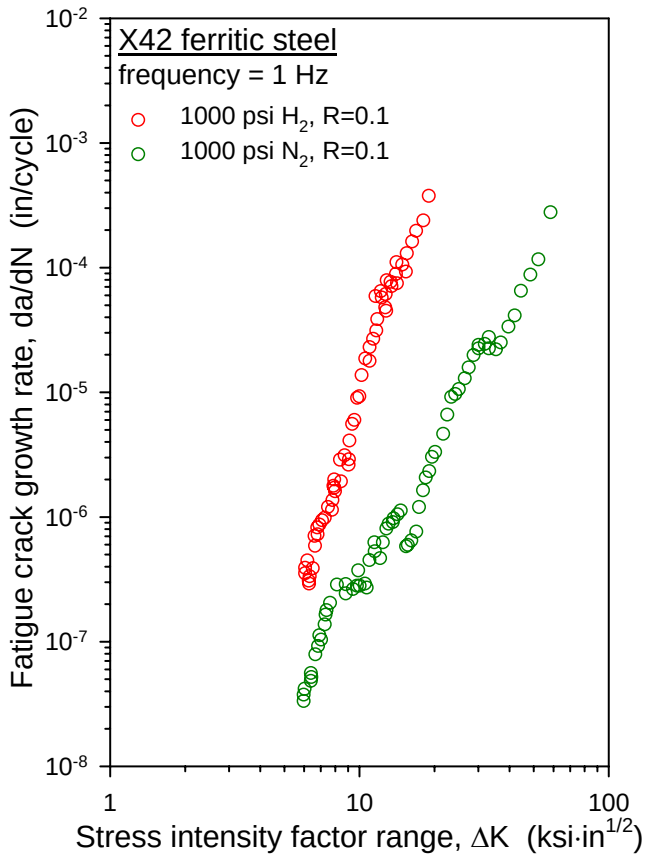

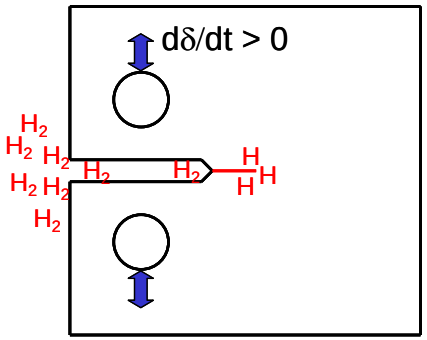

Cialone and Holbrook,
Met Trans A, 1985

HE manifested by increased fatigue crack growth rate

Material performance: service experience

- Fuel tanks
  - Aluminum or polymer lined composite
  - H_2 pressure < 70 MPa

- Manifold components
  - Austenitic stainless steel
  - H_2 pressure < 138 MPa
  - Low material strength
  - No welds

Sandia National Laboratories

Material performance: service experience

- Storage tanks
  - Low-alloy ferritic steel
  - H_2 pressure < 42 MPa
  - Limited material strength
  - No welds

- Pipelines
  - C-Mn ferritic steel
  - H_2 pressure < 14 MPa
  - Low material strength
  - No pressure cycling

Sandia National Laboratories

H_2 compatibility guidelines for metals

- Materials favored for H_2 service
  - austenitic stainless steels, aluminum alloys, low-alloy ferritic steels, C-Mn ferritic steels, copper alloys
- Materials commonly avoided in H_2 service
  - high-alloy ferritic steels, nickel alloys, titanium alloys

HE susceptibility can be sensitive to many variables

Sandia National Laboratories

Variables affecting HE

- All metals can be susceptible to HE depending on
  - Material variables
  - Environmental variables
  - Mechanical variables

- Trends demonstrated from laboratory test methods
  - Emphasize fracture mechanics data
  - Emphasize ferritic steels, austenitic stainless steels, aluminum

Sandia National Laboratories

Material variable: strength (hardness)

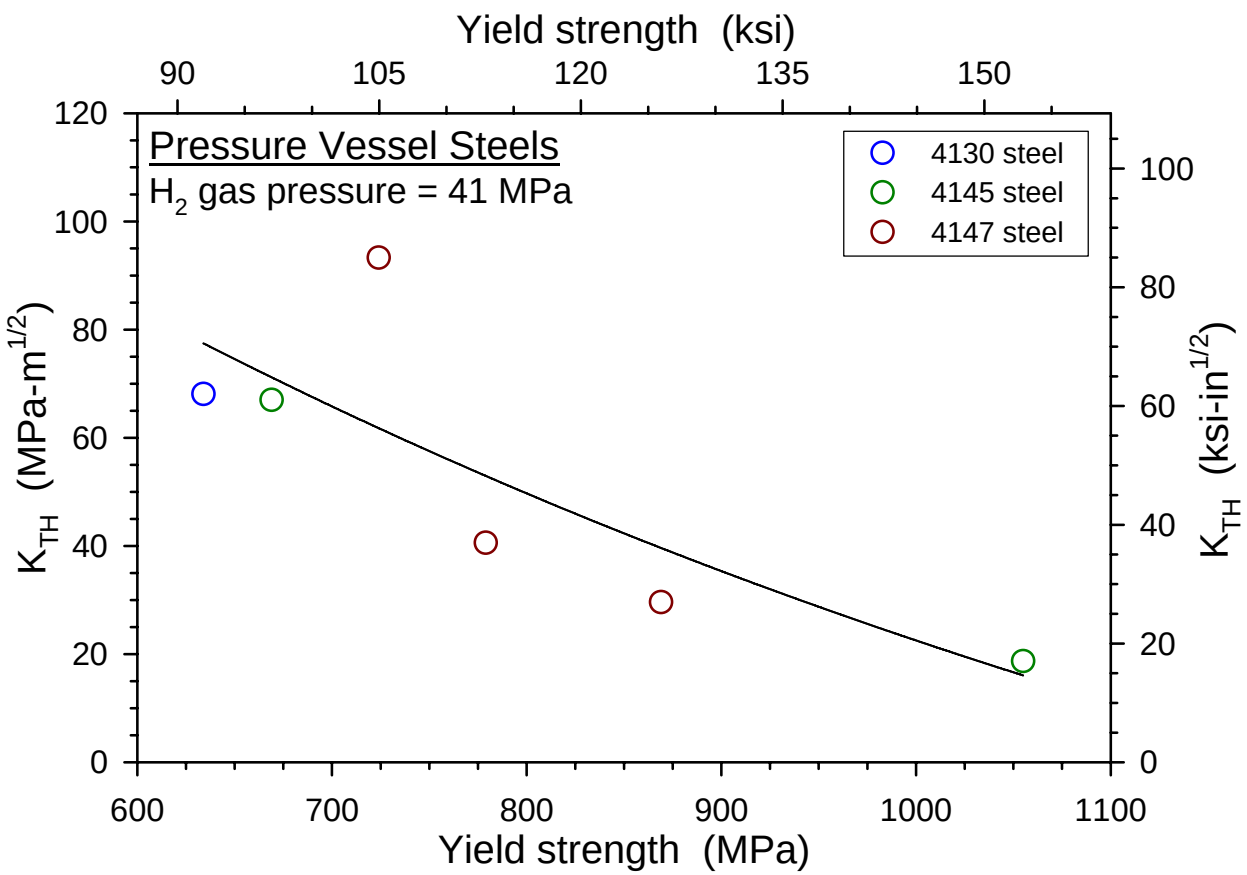

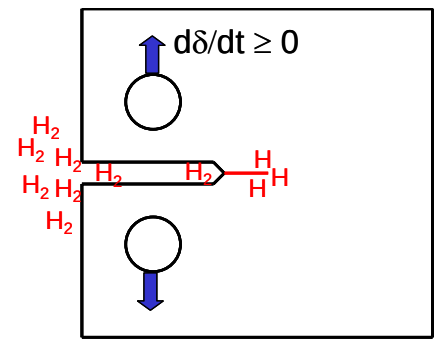

Loginow and Phelps, Corrosion, 1975

- Strength promotes HE in all materials
- Technologically important trend

Material variable: alloy composition

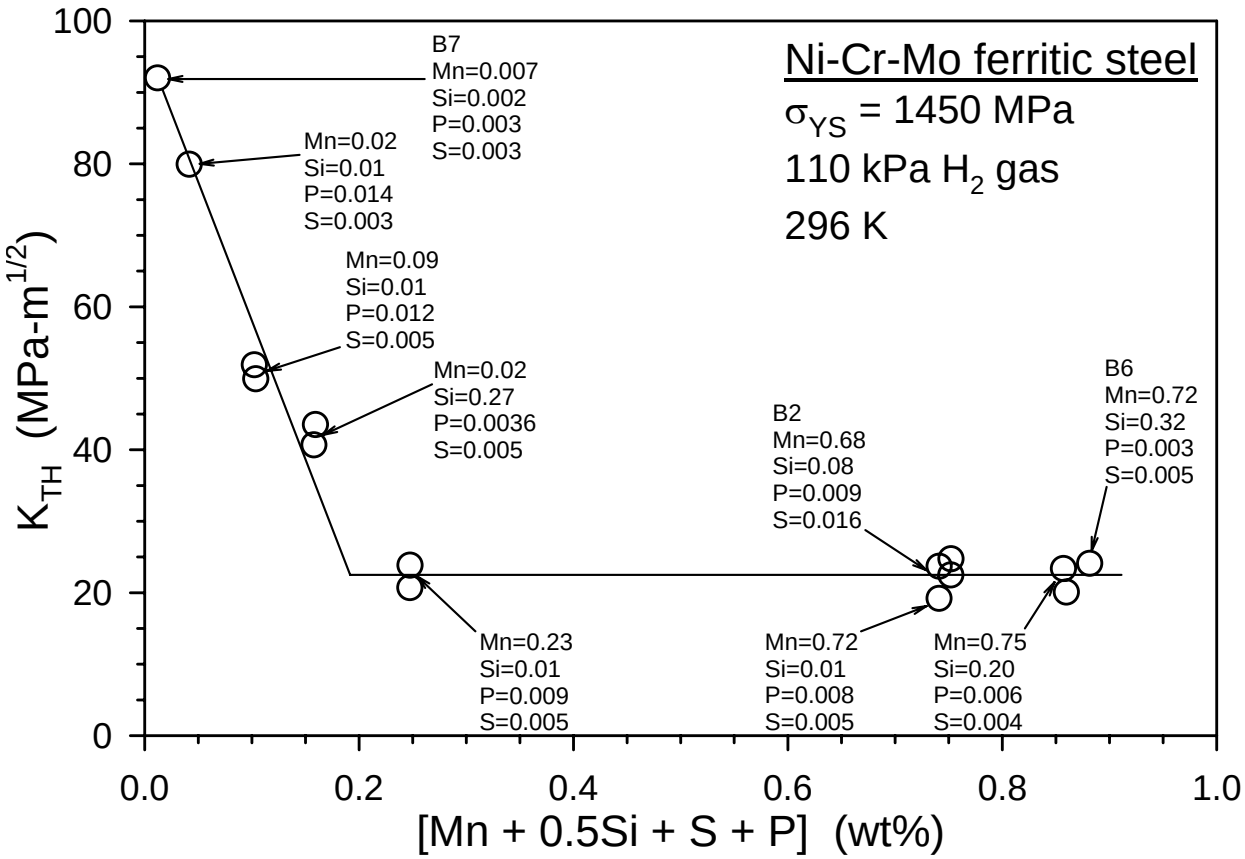

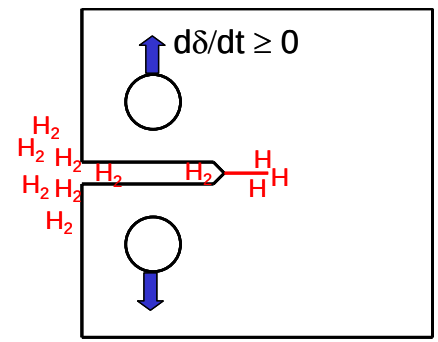

Bandyopadhyay et al., Met Trans A, 1983

Alloy composition affects intergranular HE in ferritic steels

Material variable: alloy composition

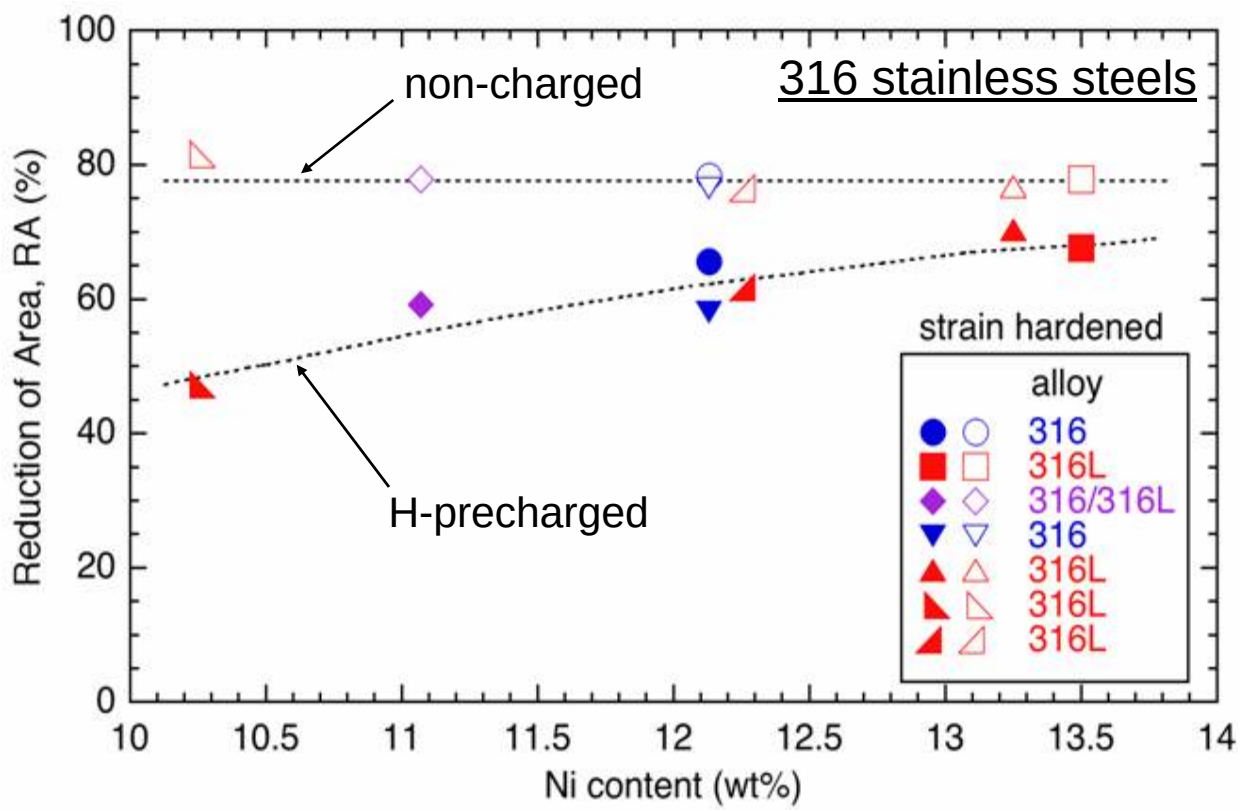

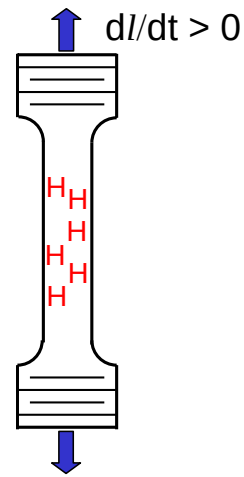

San Marchi et al., IJHE, 2008

Nickel affects deformation and/or martensite formation in stainless steels

Material variable: welding

Stainless steel weld

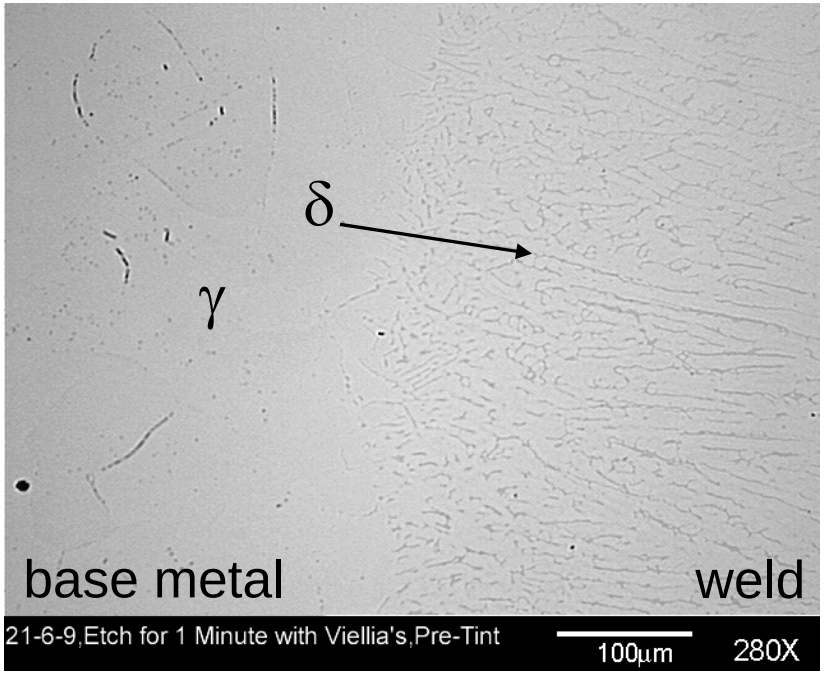

Weld tested after H_2 exposure

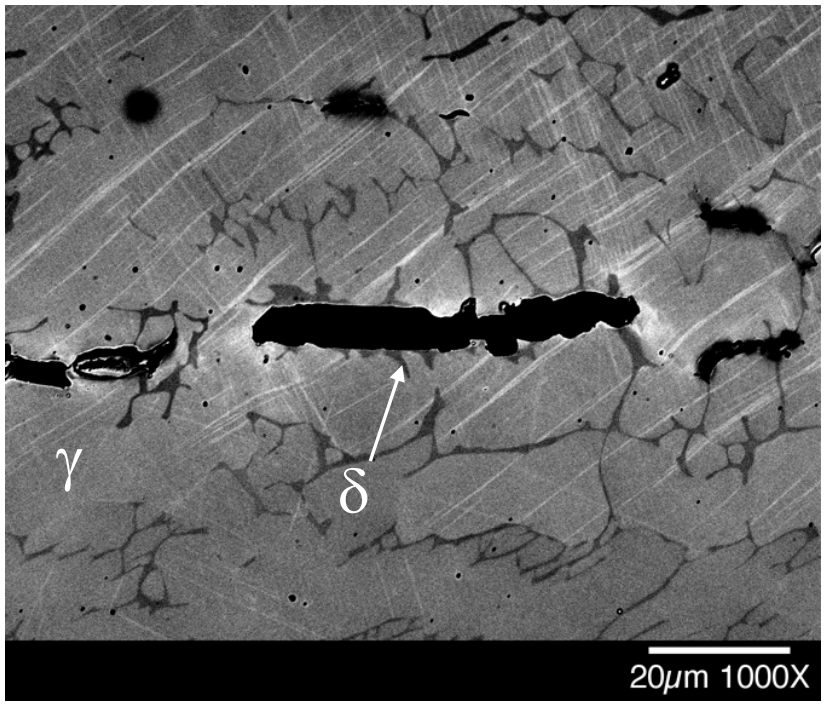

- Weld microstructure can promote HE
- Hardness, residual stress also affect HE

Sandia National Laboratories

Environmental variable: H_2 pressure

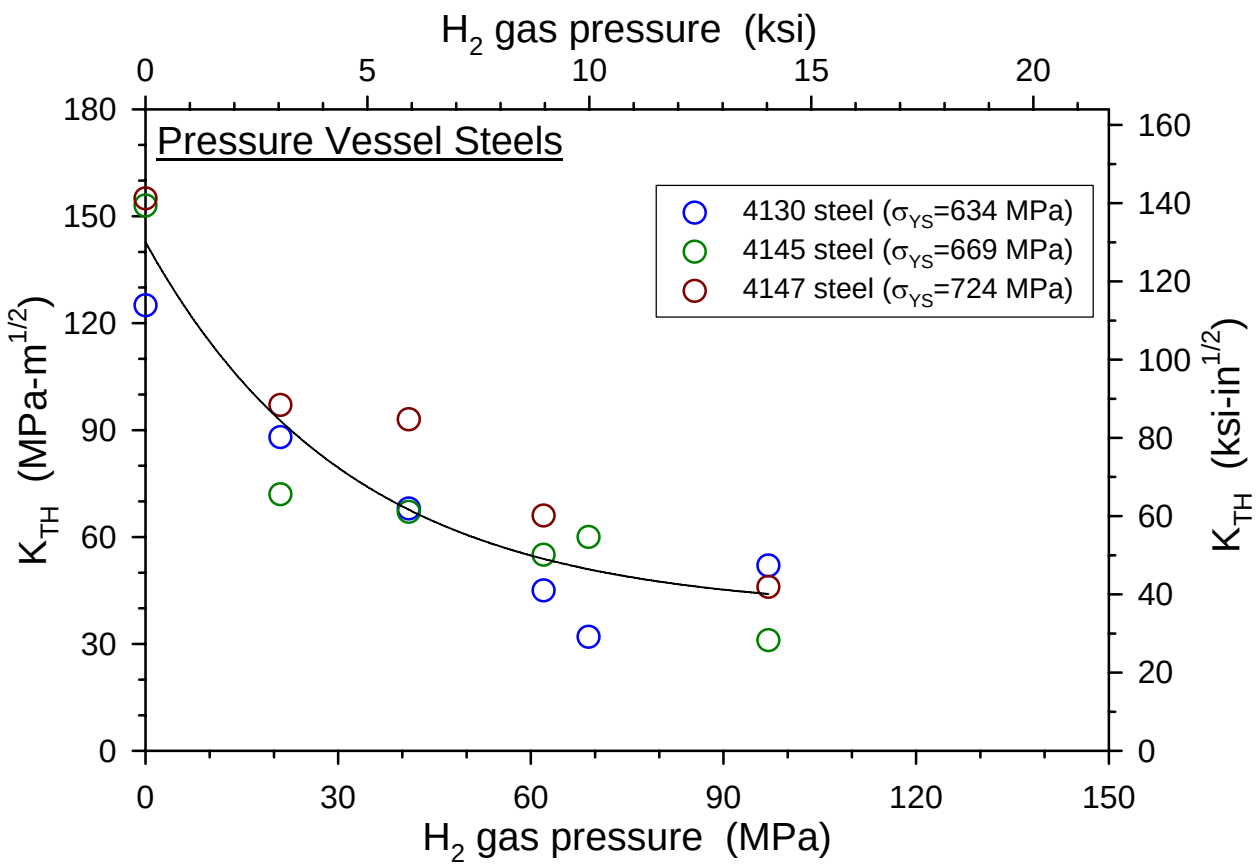

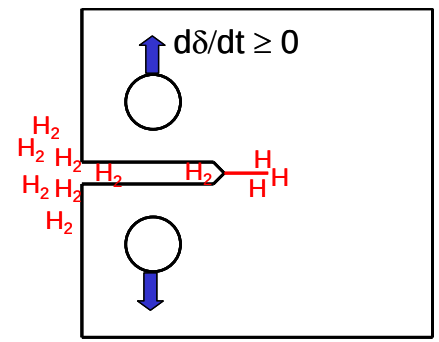

Loginow and Phelps, Corrosion, 1975

HE more severe at higher H_2 pressure for all materials

Environmental variable: temperature

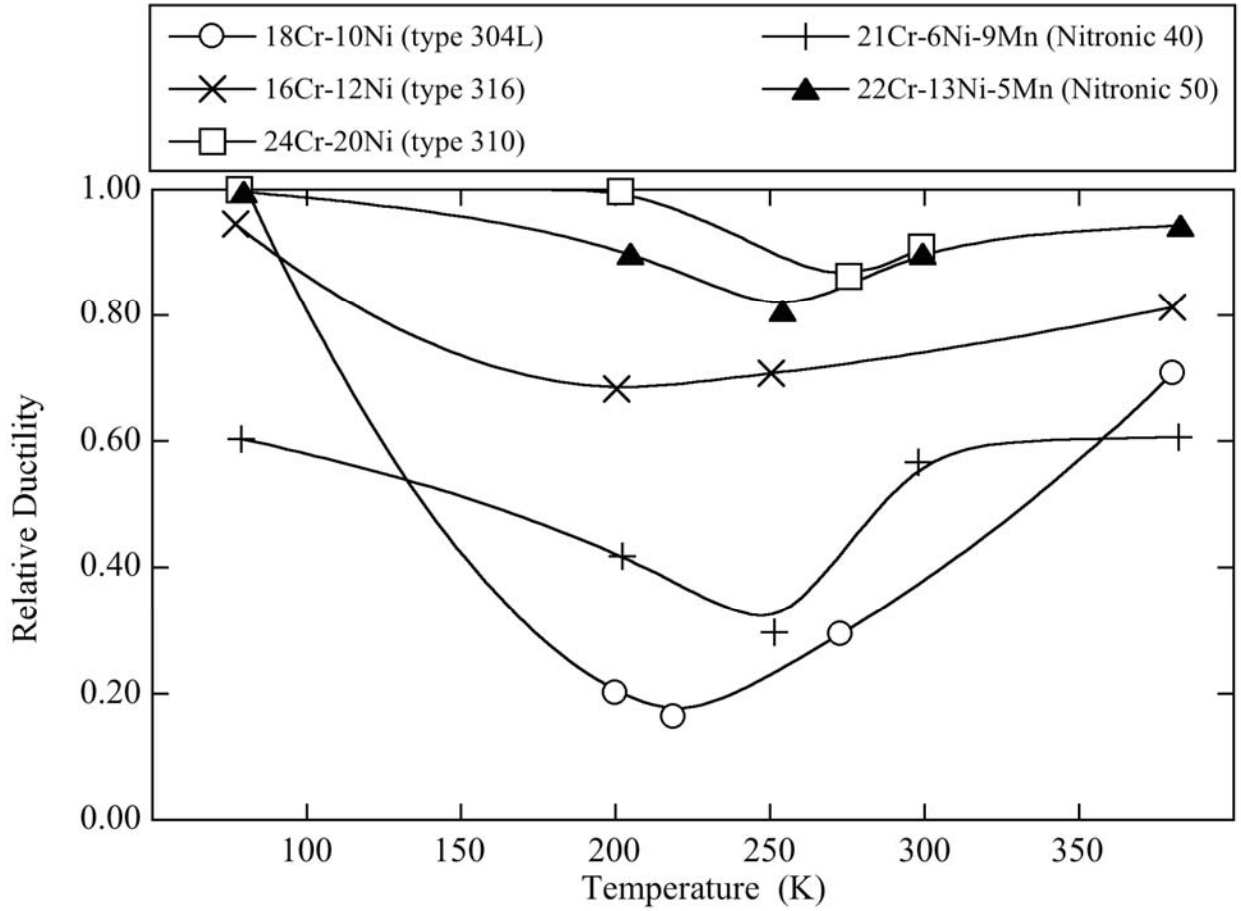

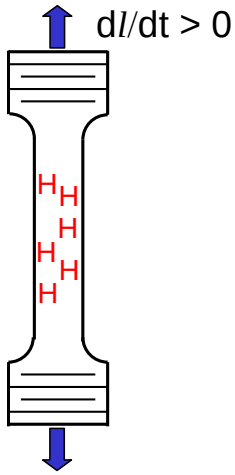

Caskey, Hydrogen Compatibility Handbook for Stainless Steels, 1983

HE can be maximum at ambient temperature

Environmental variable: H_2 purity

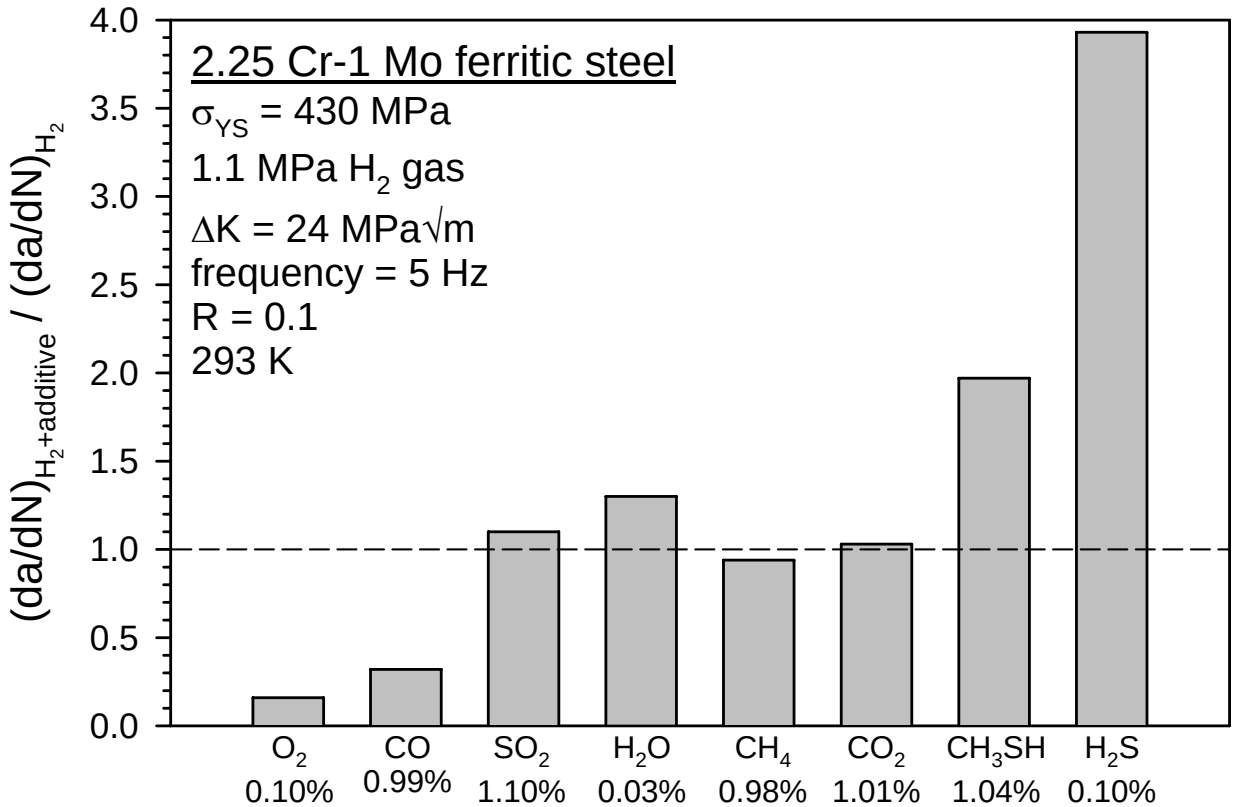

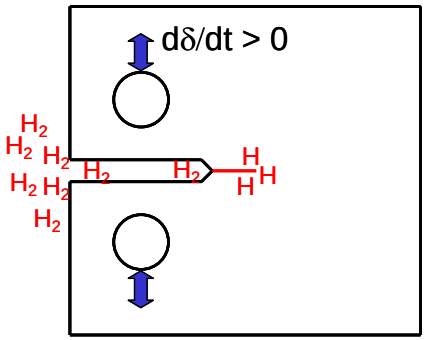

Fukuyama et al., Pressure Vessel Technology, 1992

Gas impurities can inhibit or intensify HE in ferritic steels

Environmental variable: H_2 purity

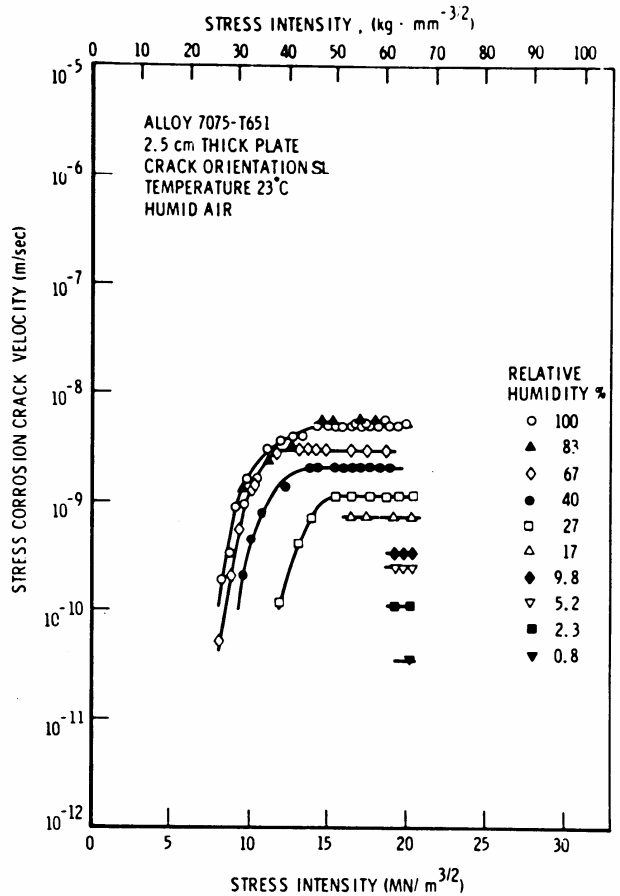

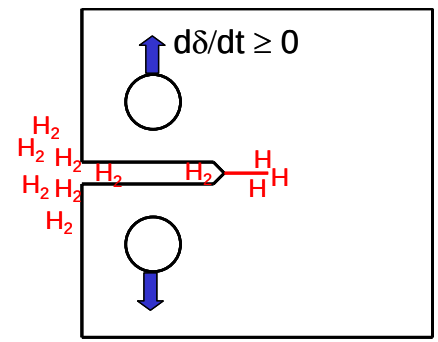

Speidel, Hydrogen Embrittlement and Stress Corrosion Cracking, 1984

Water vapor promotes HE in aluminum alloys

Mechanical variable: loading rate

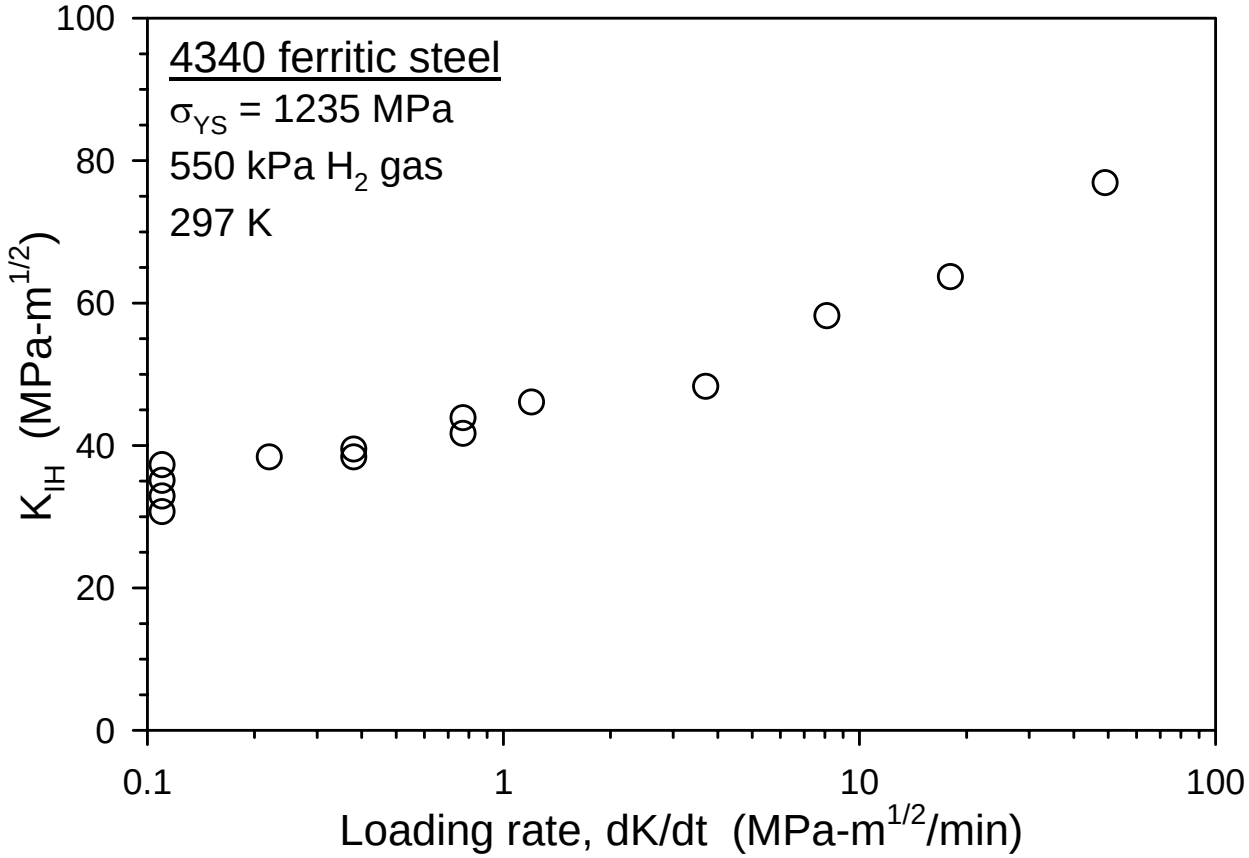

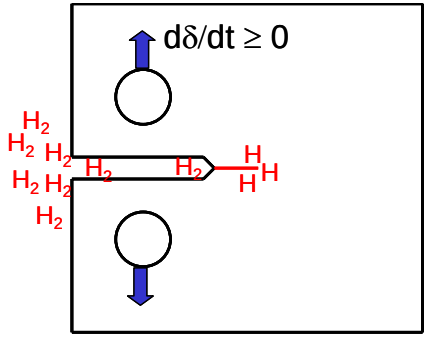

Clark and Landes, ASTM STP 610, 1976

HE more severe at lower loading rates in all materials

Mechanical variable: load cycle frequency

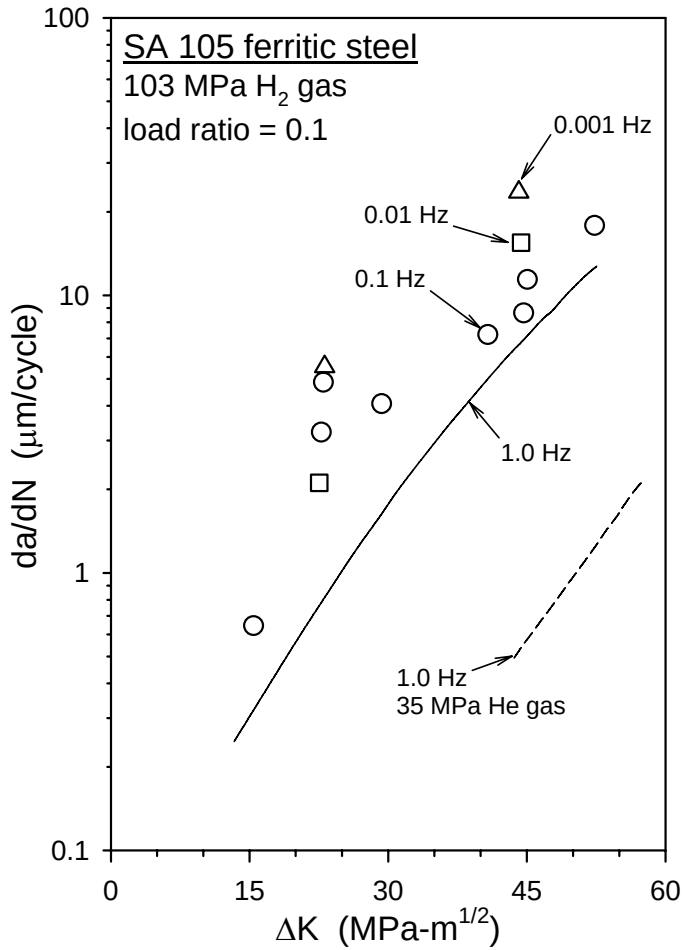

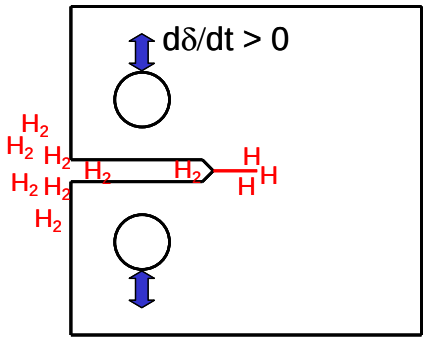

Walter and Chandler, Effect of Hydrogen on Behavior of Materials, 1976

HE more severe at lower load cycle frequency in all materials

Considerations for materials selection

1) HE data or service experience should not be extrapolated

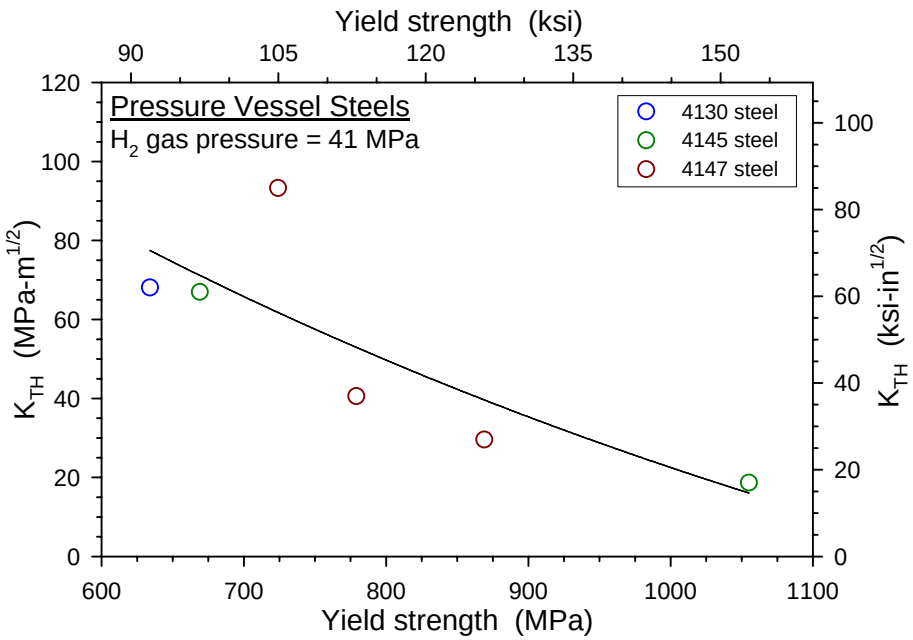

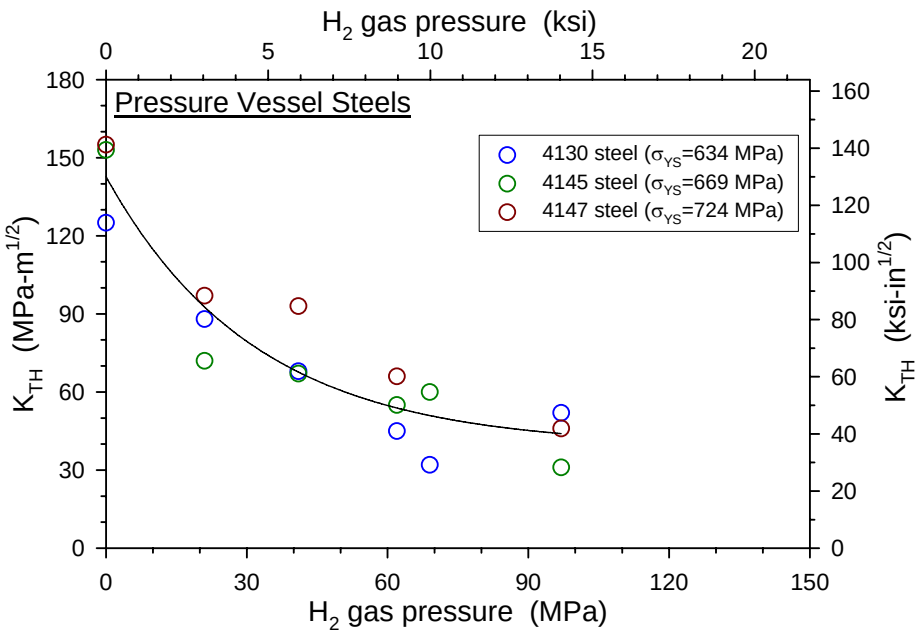

- H_2 compatibility must be established for specific conditions

Considerations for materials selection

2) HE can be severe in alloys considered compatible with H_2

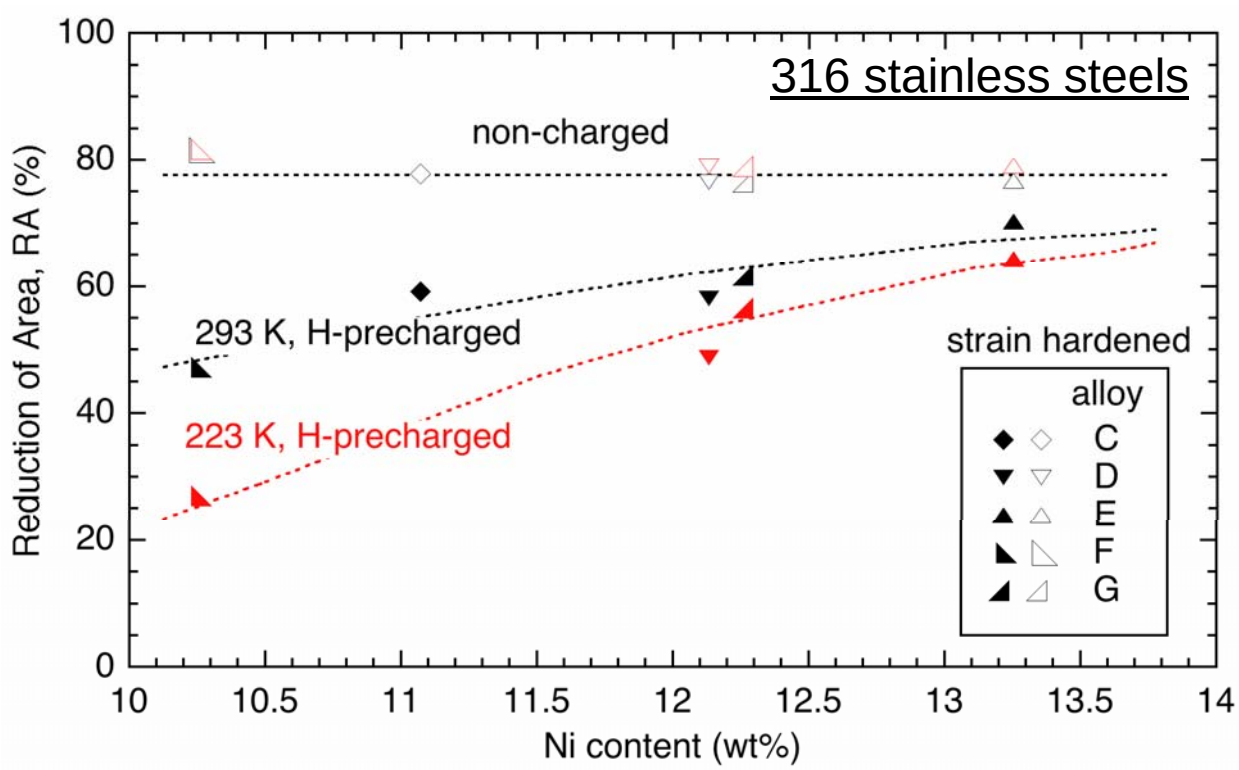

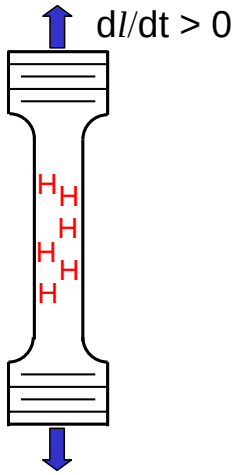

- Intersections of variables important

Considerations for materials selection

3) Materials selection may balance H_2 compatibility with other constraints

Material	Cost	Specific strength	Temperature range	HE resistance
austenitic SS	high	low to high	cryogenic to high	high
C-Mn/low-alloy steels	low	low to high	ambient to high	low to intermediate
aluminum	intermediate	intermediate to high	cryogenic to low	high

Sandia National Laboratories

Considerations for materials selection

4) Materials must be qualified for H_2 service based on
   - Material property measurements under relevant conditions
     - Material variables
     - Environmental variables
     - Mechanical variables
   - Design approach for component

Sandia National Laboratories

Design based on fracture mechanics

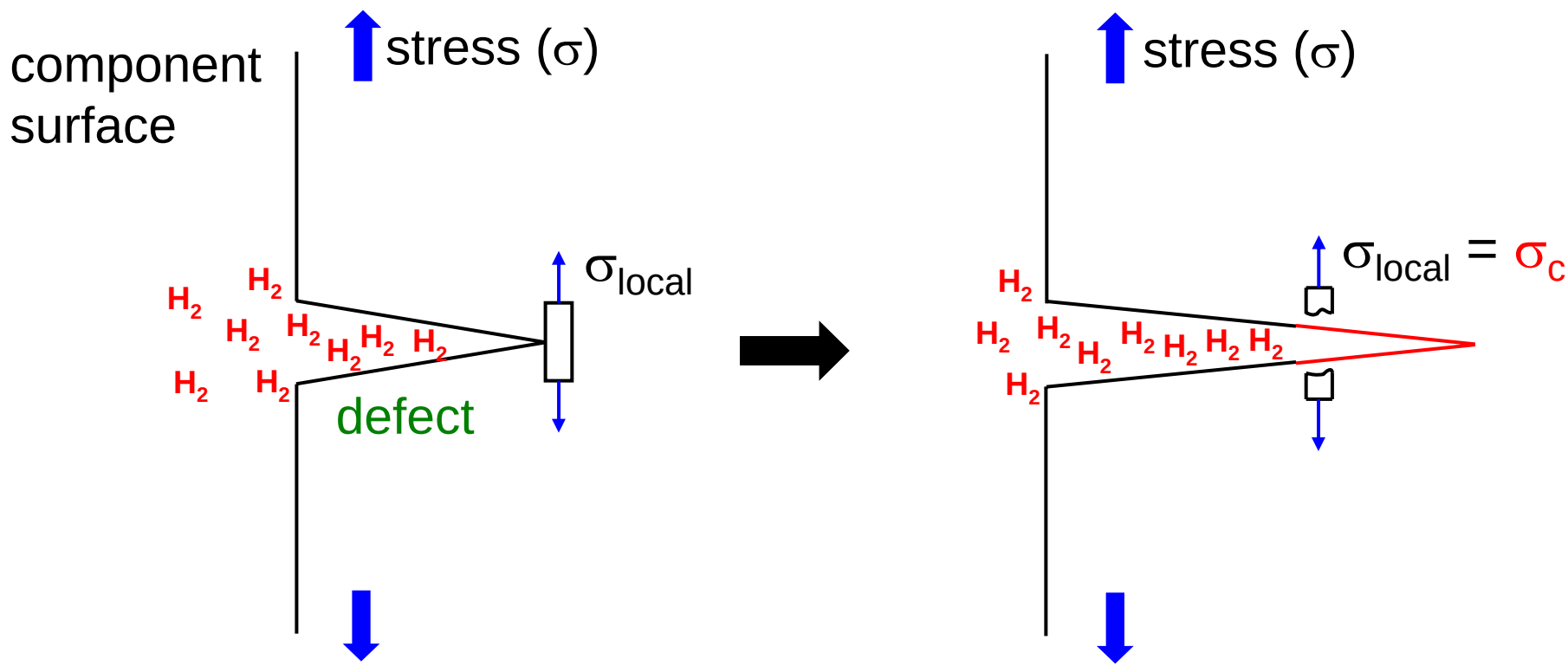

Local stress drives crack extension

Design based on fracture mechanics

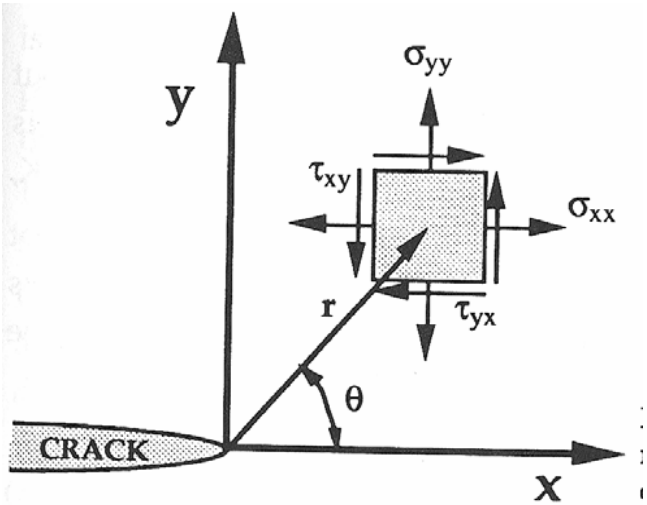

$$\sigma_{ij} = \frac{K}{\sqrt{2\pi r}} f_{ij}(\theta)$$

- Local stress described by stress-intensity factor, K
- Crack extension governed by critical K values

Component design: sustained-load cracking

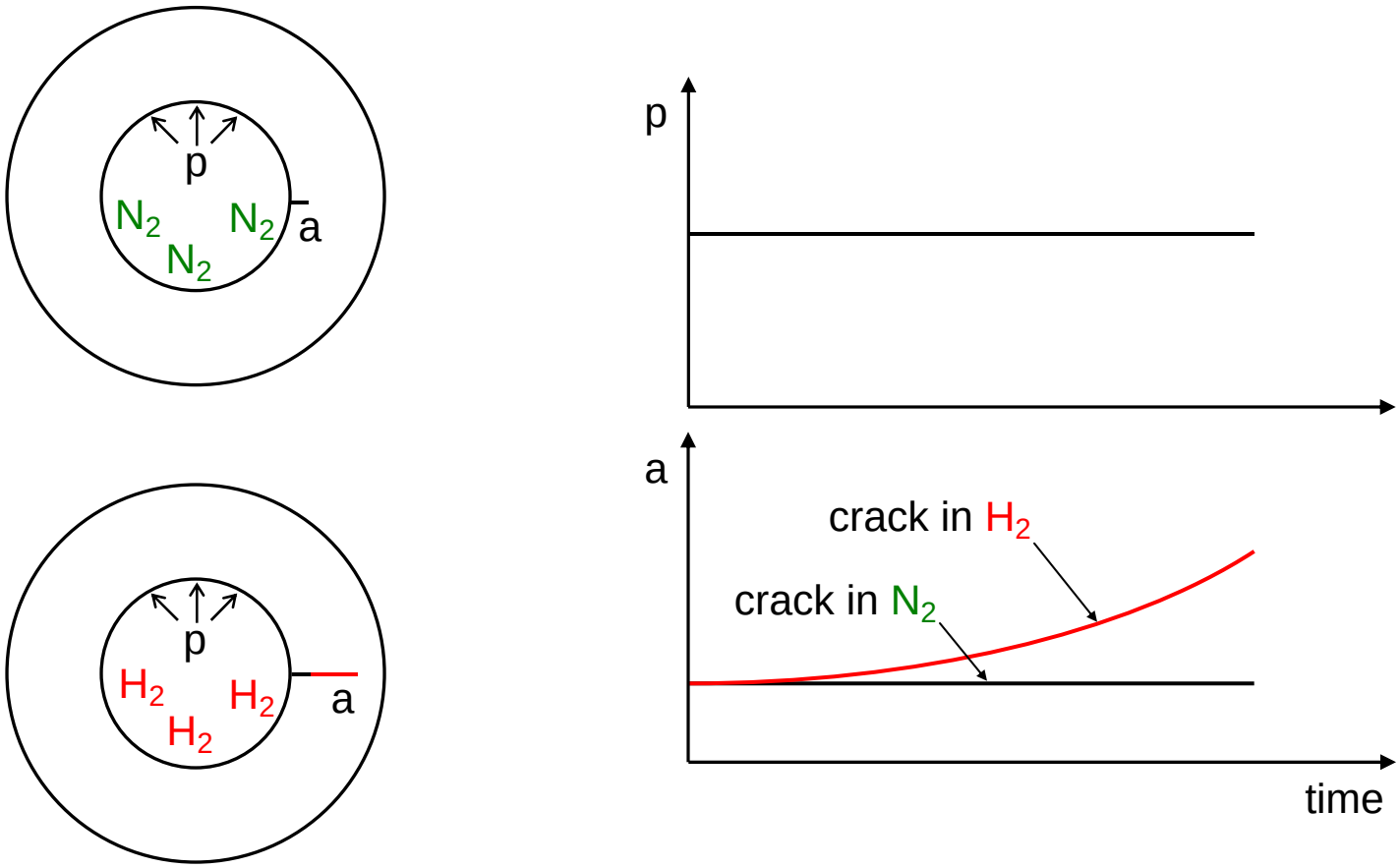

H_2 induces time-dependent crack propagation under static loading

Component design: sustained-load cracking

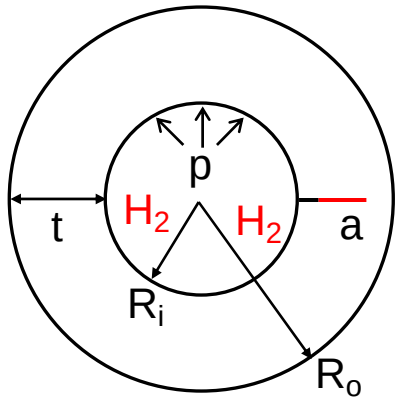

$K = p * f(a/t, R_i, R_o)$

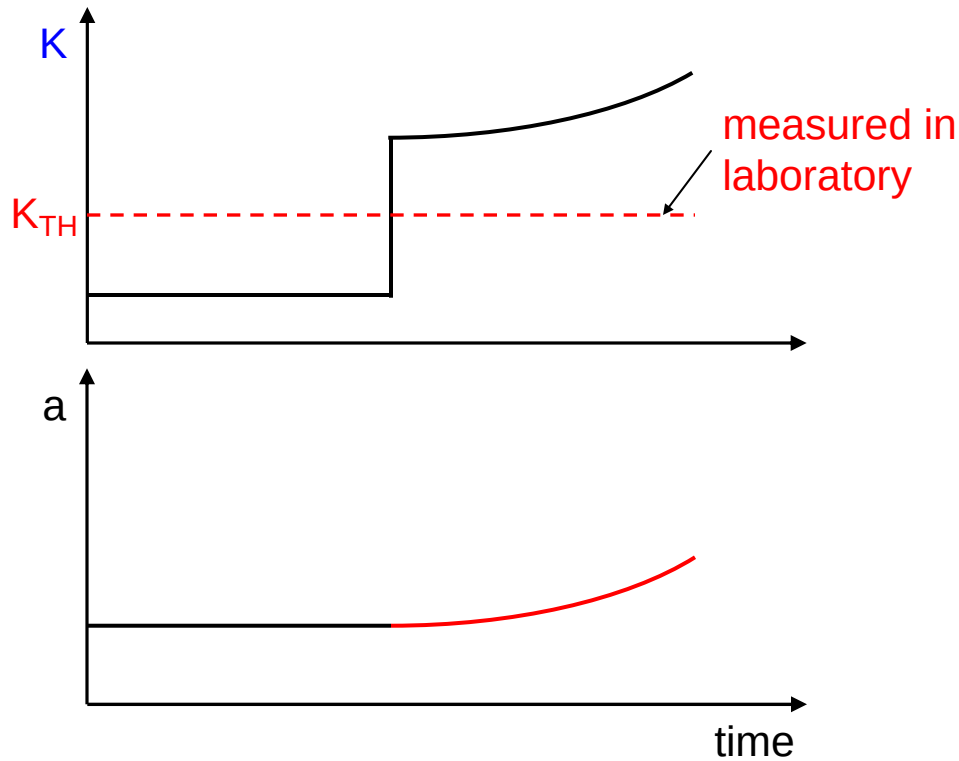

Sustained-load cracking proceeds when $K > K_{TH}$

Component design: fatigue crack growth

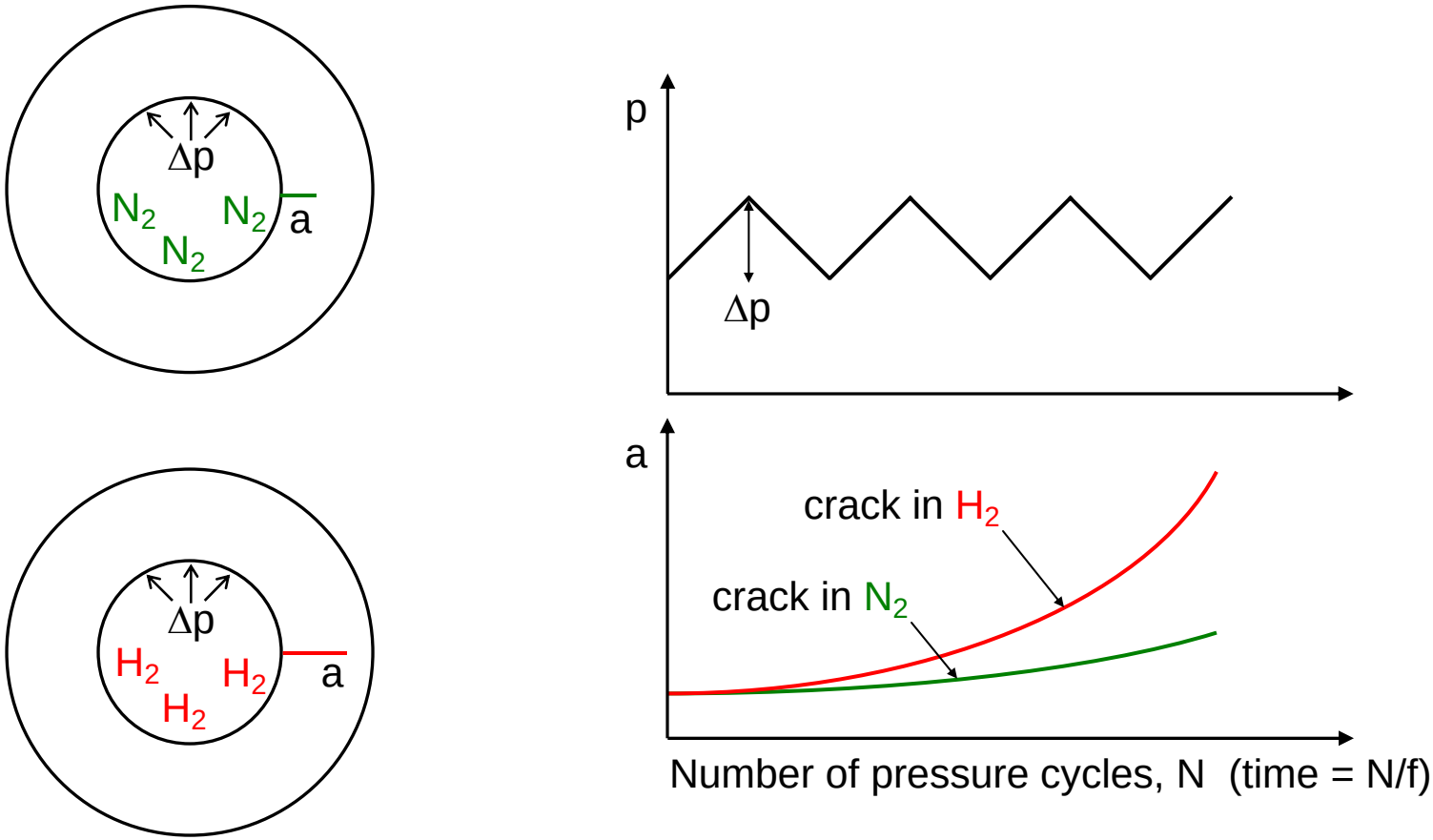

Crack growth under cyclic loading accelerated by H_2

Component design: fatigue crack growth

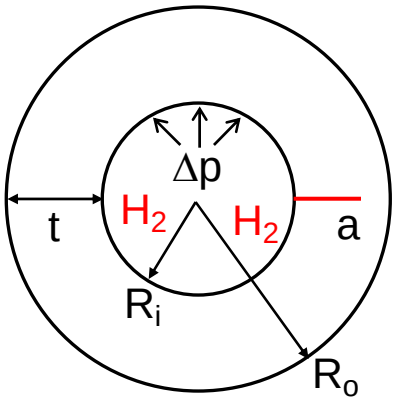

$\Delta K = \Delta p * f(a/t, R_i, R_o)$

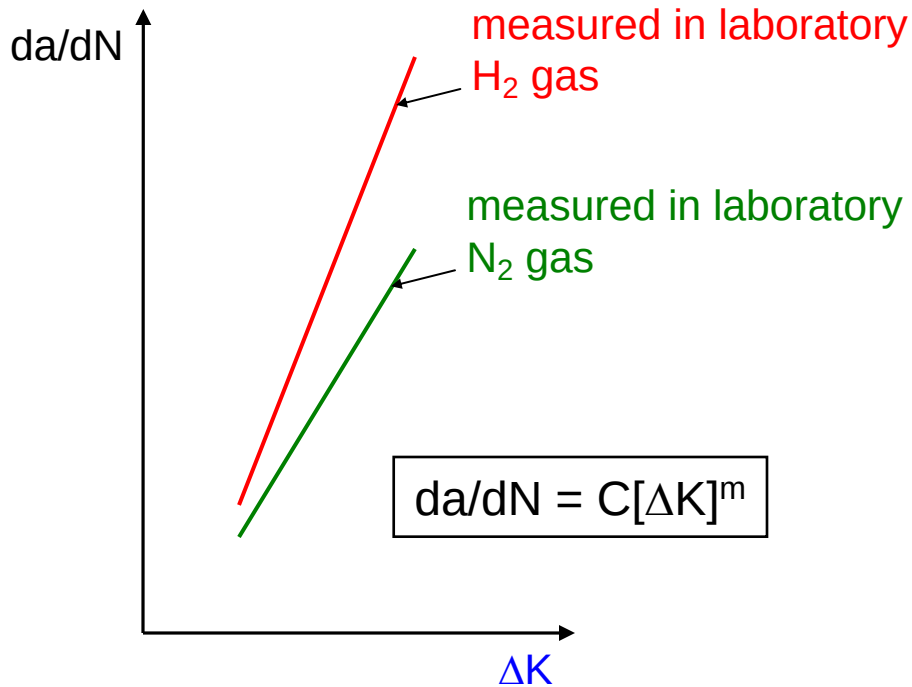

Fatigue crack growth rates (da/dN) are a function of ΔK

Component design analysis

- Objective: calculate number of pressure cycles, N_c, to grow crack to critical length, a_c

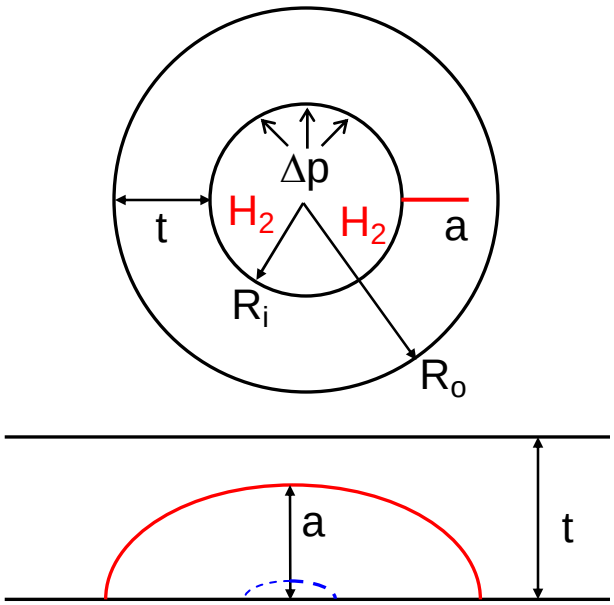

$K = p * f(a/t, R_i, R_o)$

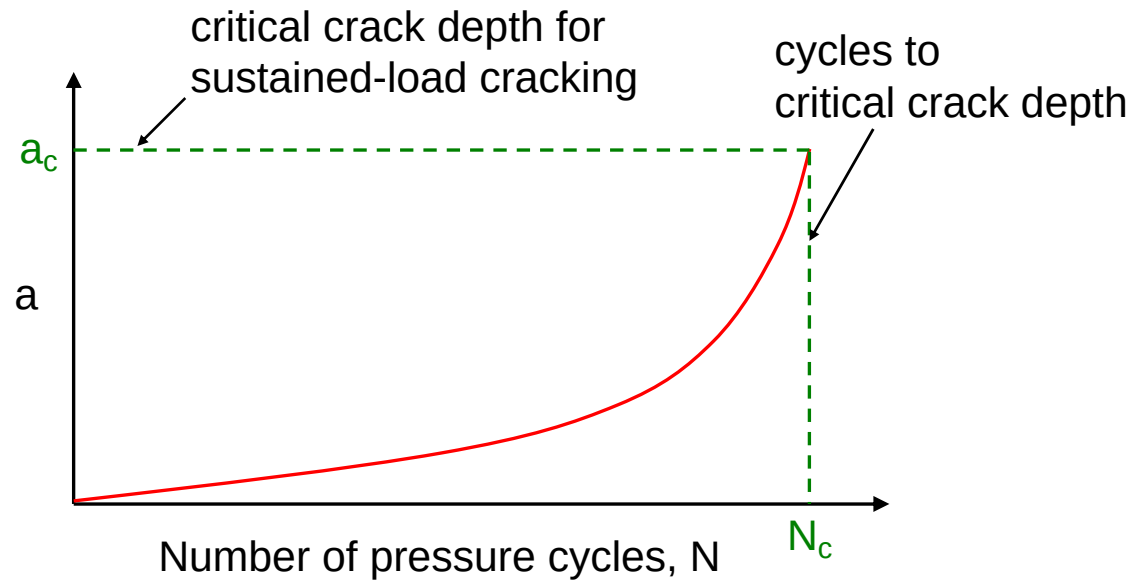

Calculation requires material property measurements: K_{TH} and da/dN *vs* ΔK

Measurement: fatigue crack growth

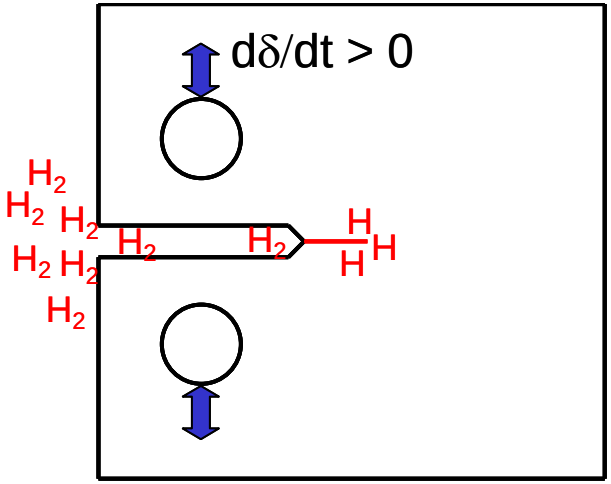

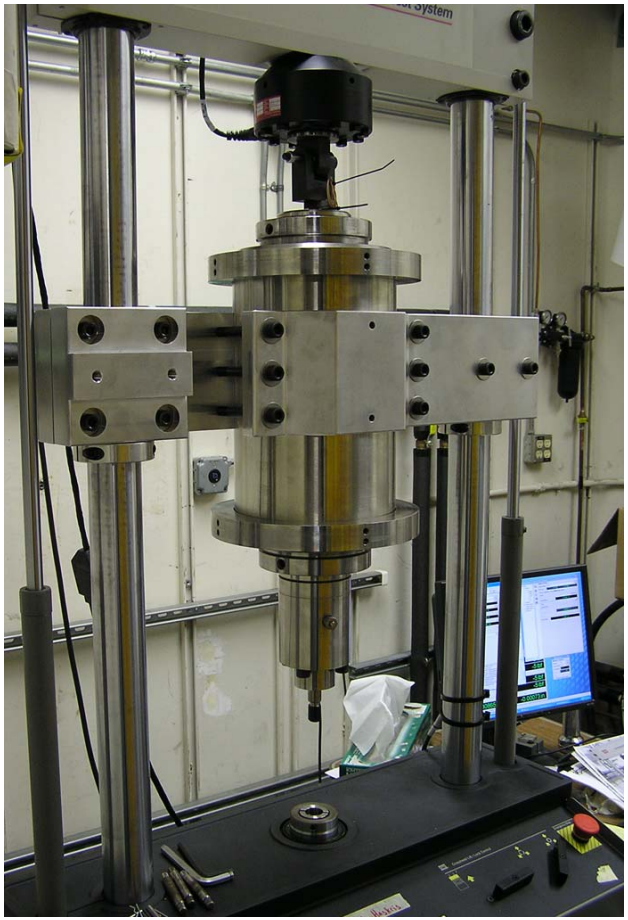

Measurement: fatigue crack growth

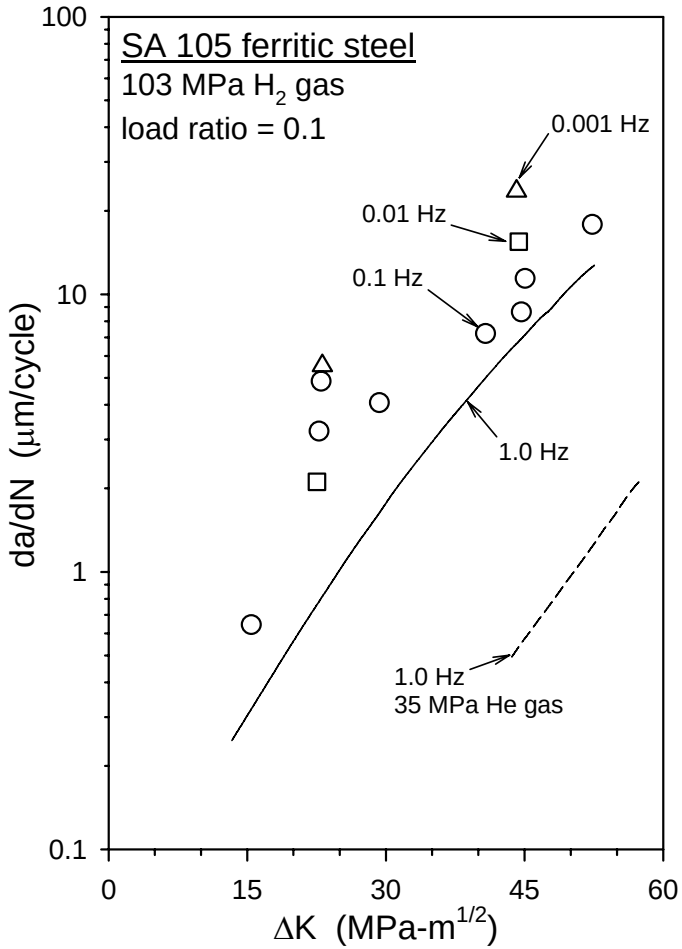

$da/dN = C[\Delta K]^m$

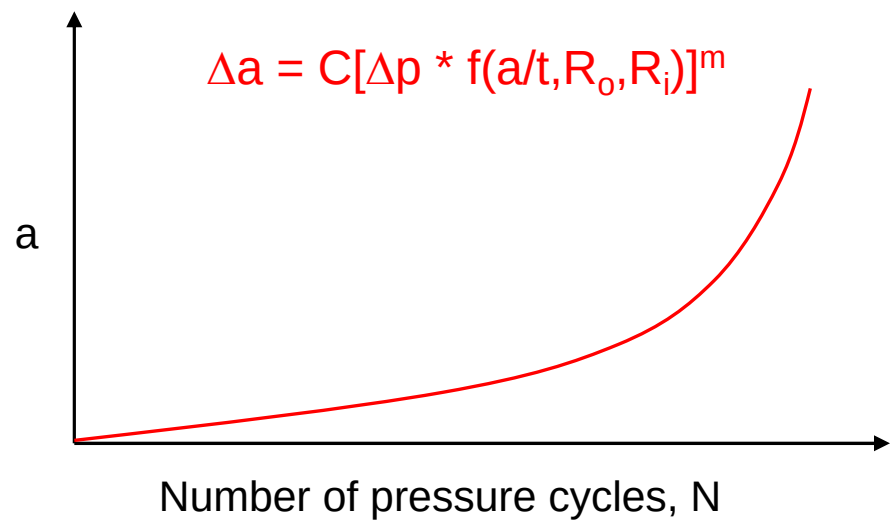

Measurement gives crack length *vs* number of cycles in design analysis

Measurement: cracking threshold

Wedge Opening Load (WOL) specimen

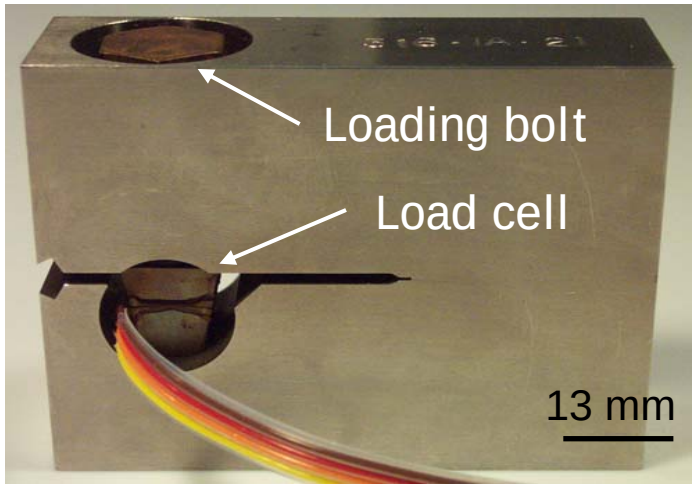

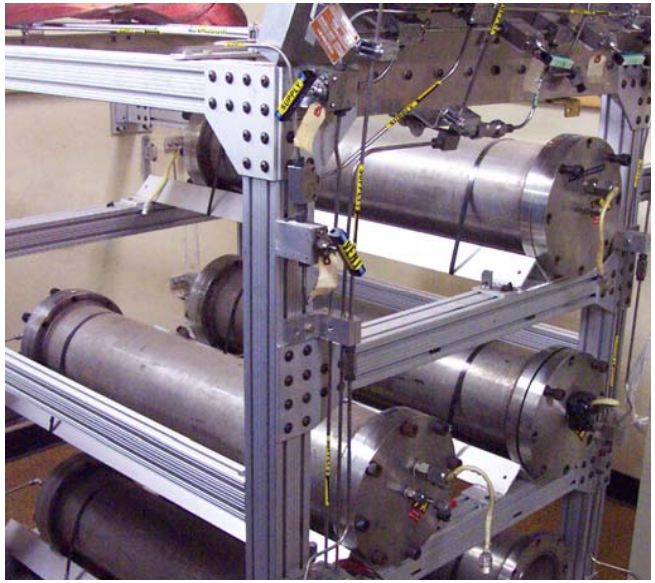

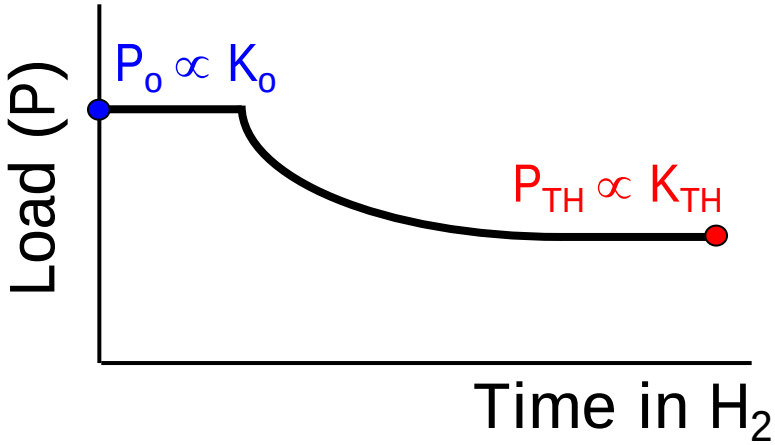

Measurement: cracking threshold

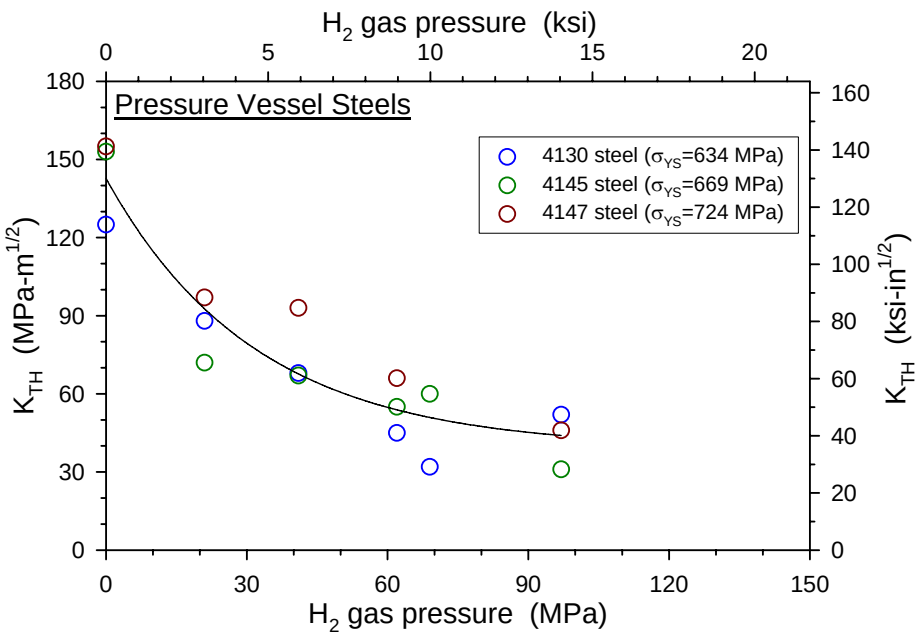

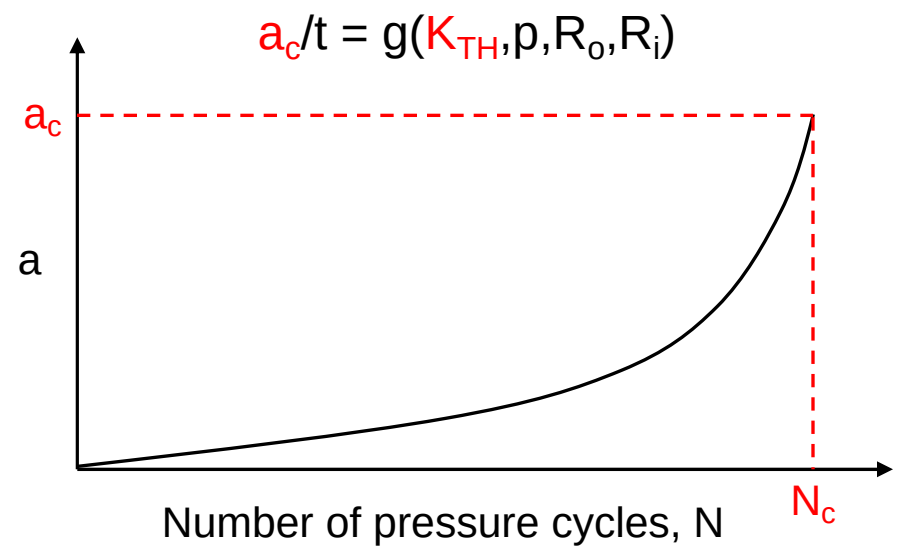

Measurement gives critical crack depth (a_c) in design analysis

Example design analysis for H_2 pipeline

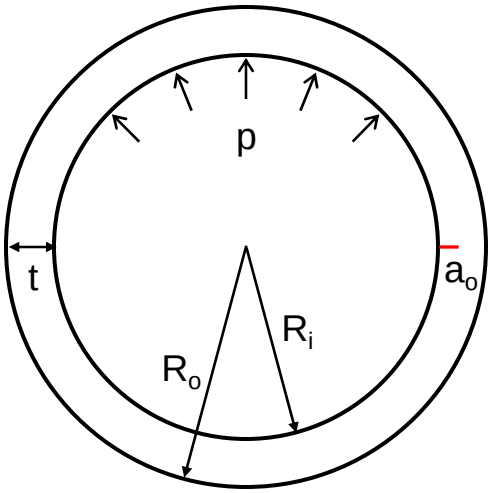

- Parameters for H_2 pipeline

  (*ASME, Hydrogen Standardization Interim Report, 2005*)

  - X42 ferritic steel
  - Inner radius, R_i = 15 cm
  - Wall thickness, t, from 0.5 to 1.3 cm

- Maximum pressure, p = 10 MPa

- Existing defect with depth a_o and length parallel to pipe axis

Example design analysis for H_2 pipeline

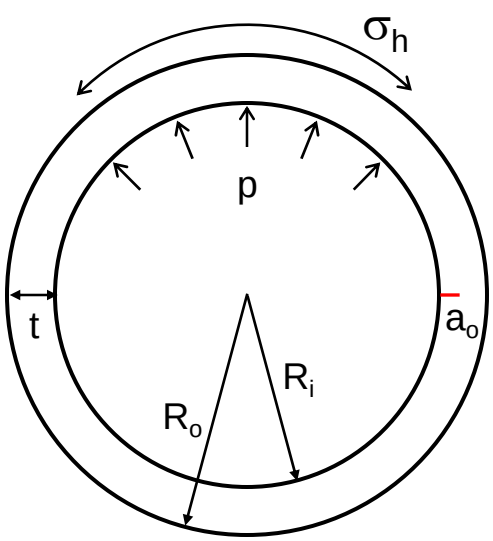

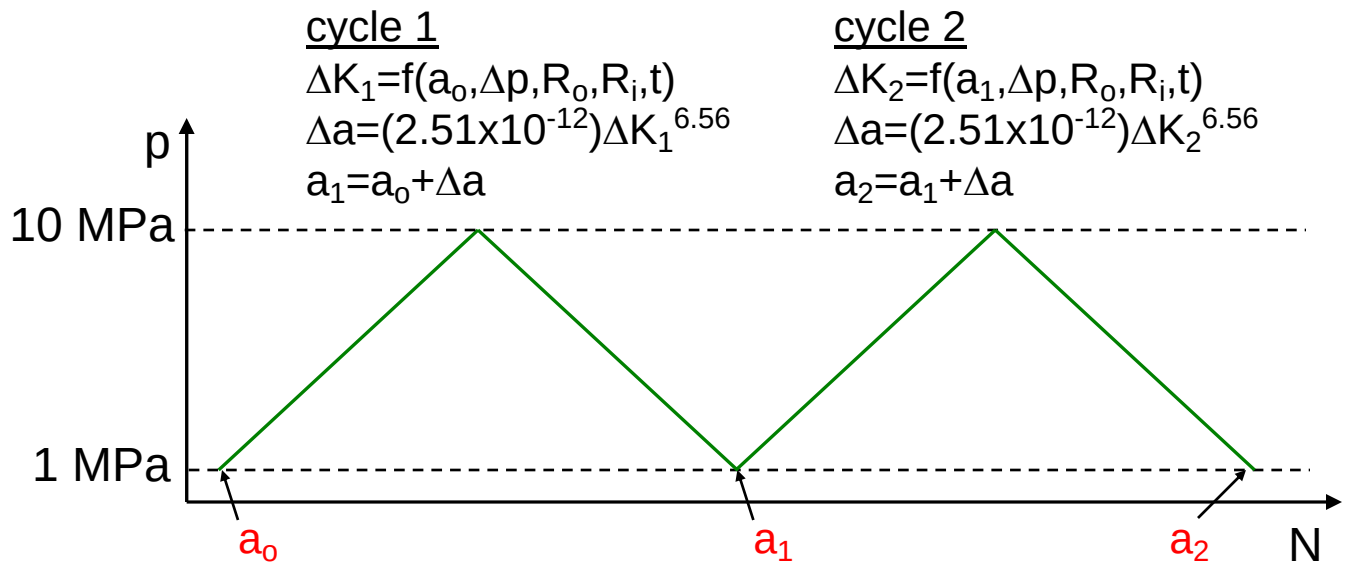

- Case 1: t=0.8 cm (σ_h=65% SMYS) and a_o/t=0.10
- Case 2: t=1.3 cm (σ_h=43% SMYS) and a_o/t=0.10
- Case 3: t=1.3 cm (σ_h=43% SMYS) and a_o/t=0.05

Example design analysis for H_2 pipeline

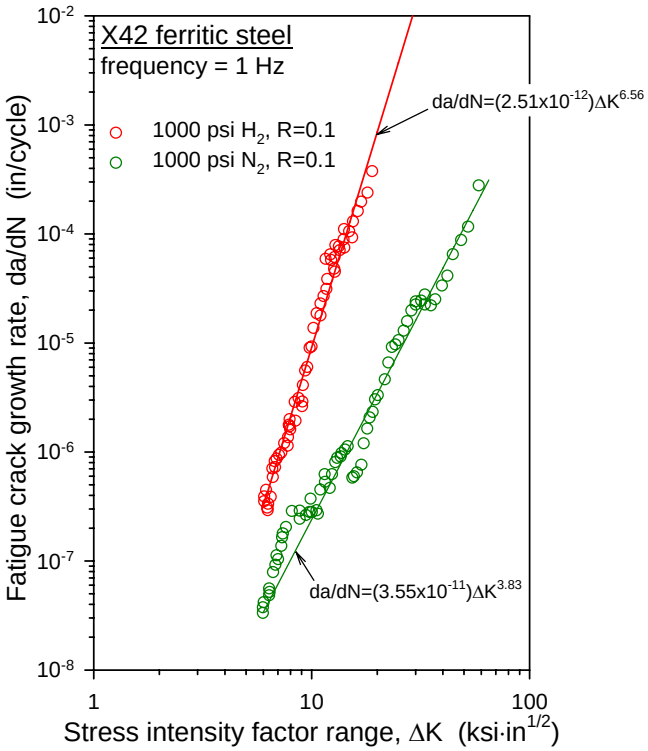

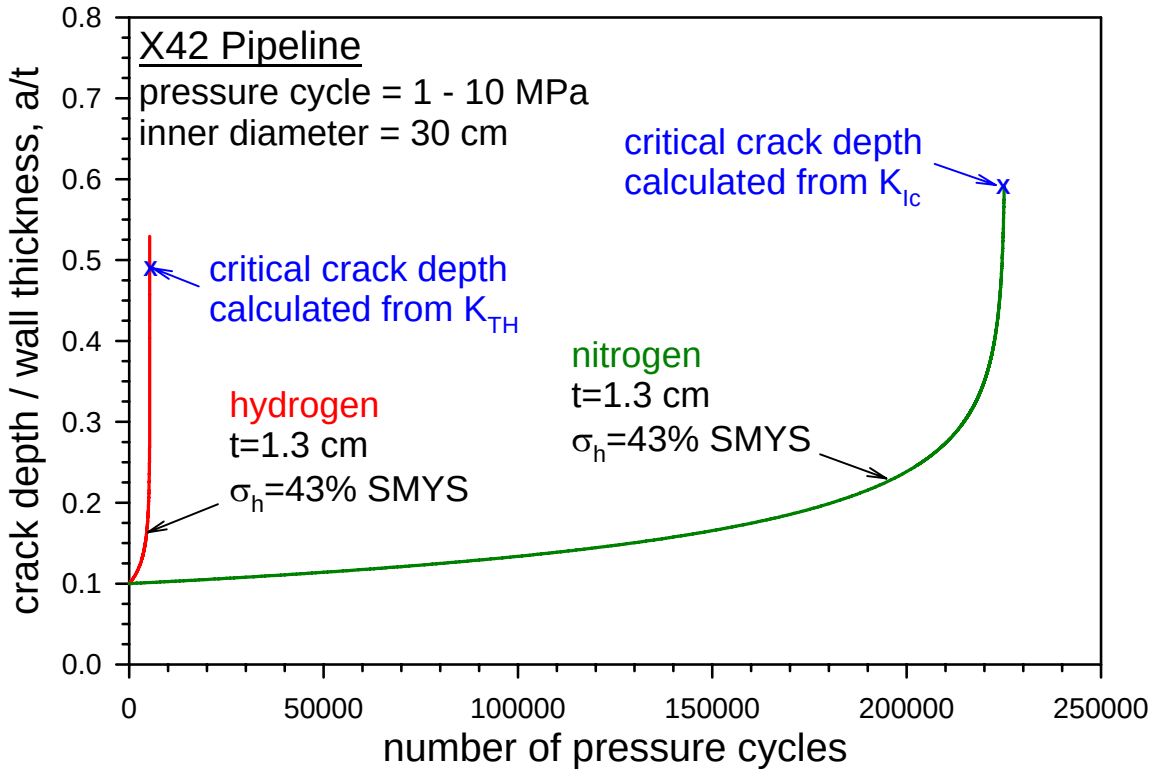

Material/component performance can be quantified with design analysis

Example design analysis for H_2 pipeline

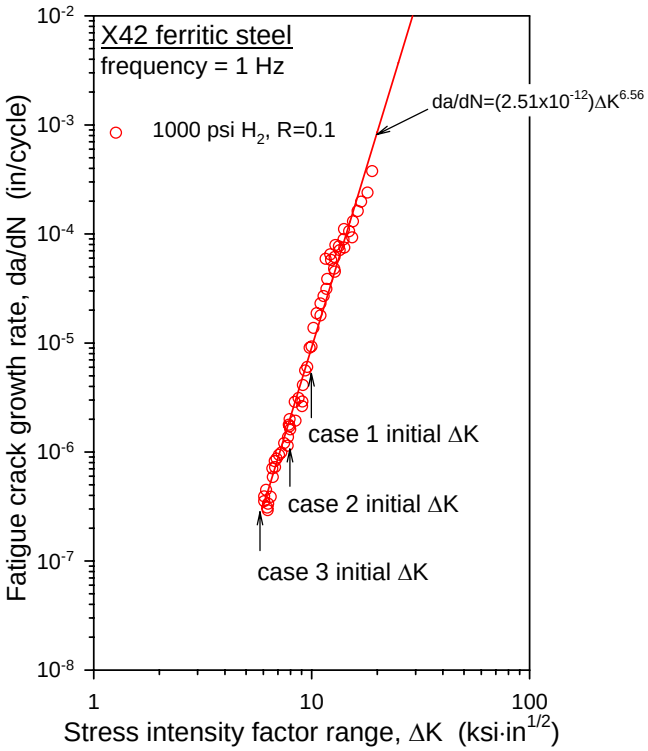

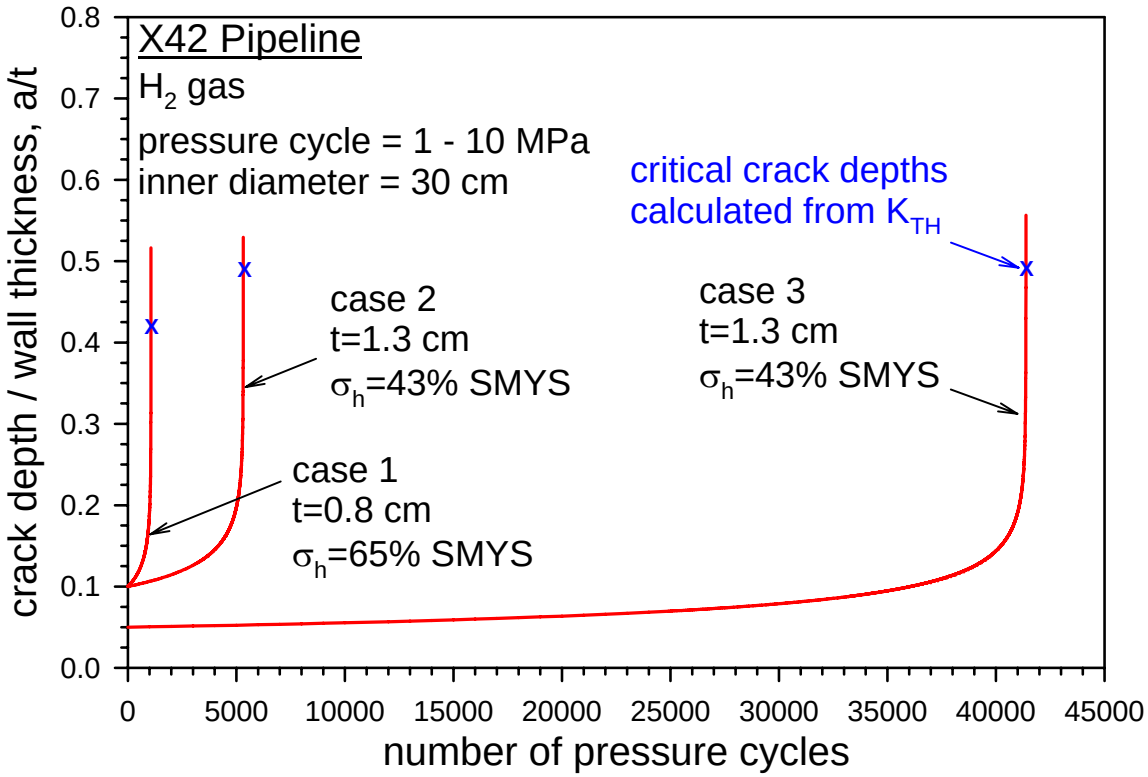

Performance depends on both material properties and component design

Recommendations

1) Austenitic stainless steels, aluminum alloys best candidates for H_2 service
   - Based on service experience and testing
   - Do not extrapolate performance or test data
     - Define temperature, alloy composition for austenitic stainless steels
     - Define water vapor content of gas for aluminum alloys
   - Design analysis can quantify safety margins

Sandia National Laboratories

Recommendations

2) Ferritic steels are susceptible to HE under wide range of conditions
   - Service experience may be adequate but design analysis required in many cases
   - Measure properties under specific conditions
     - Material: strength, alloy composition, fabrication (e.g., welding)
     - Environment: H_2 pressure, H_2 composition, temperature

Sandia National Laboratories

Recommendations

3) Nickel alloys, titanium alloys are generally not recommended for H_2 service
   - Design analysis required
   - May require other measures such as H_2 permeation barrier

Sandia National Laboratories